Order no. 6522 0069 13
Part no. 451 584 05 00
Edition A-2014

www.smart.com

smart - A Daimler brand

Operator's Manual smart fortwo coupé and smart fortwo cabriolet electric drive

>> Operator's Manual.

smart fortwo coupé and smart fortwo cabriolet electric drive

Symbols

Trademarks®:

- Bluetooth® is a registered trademark of Bluetooth SIG Inc.
- ESP® is a registered trademark of Daimler.
- iPod® is a registered trademark of Apple Inc., registered in the U.S.A. and other countries.

The following symbols are found in this Operator's Manual:

* Optional equipment is identified with an asterisk. Since standard equipment varies between models, the descriptions and illustrations in this Operator's Manual may differ slightly from the actual equipment of your vehicle.

⚠ WARNING

Warning notices draw your attention to hazards that may endanger your health or life, or the health or life of others.

! Highlights hazards that may result in damage to your vehicle.

i Helpful hints or further information you may find useful.

▶ This symbol points to instructions for you to follow.

▶ A number of these symbols appearing in succession indicates a multiple-step procedure.

▷ page This symbol tells you where you can find additional information on a topic within this Operator's Manual.

▷ ▷ This continuation symbol marks a warning or procedure which is continued on the next page.

Service and Literature

Your authorized electric drive smart center has trained technicians and Genuine smart Parts to service your vehicle properly.

For expert advice and quality service, contact an authorized electric drive smart center.

For further information you can find us on the smart web-site **www.smartusa.com** (USA only) or **www.thesmart.ca** (Canada only).

⚠ WARNING

To help avoid personal injury, be extremely careful when performing any service work or repairs. Improper or incomplete service or the use of incorrect or inappropriate parts or materials may damage the vehicle or its equipment, which may in turn result in personal injury.

If you have any questions about carrying out any type of service, turn to the advice of an authorized electric drive smart center.

We reserve the right to make changes in design and equipment.

Therefore, information, illustrations and descriptions in this Operator's Manual might differ from your vehicle.

Reprinting, translation and copying, even of excerpts, is not permitted without our prior authorization in writing.

As at 13.06.2013

Let the fun begin!

Take a moment to familiarize yourself with your smart fortwo electric drive coupé or cabriolet and read through the Operator's Manual before driving. This will ensure you get more fun out of your vehicle – and avoid danger to yourself and others.

This Operator's Manual contains very important information about how to safely and effectively operate the vehicle. It is important to note that this is a unique vehicle. It is obviously smaller than most vehicles on the road and, for this reason, it can provide both unique experiences and special responsibilities. It is extremely important that you read this entire Manual and that you familiarize yourself with how the vehicle works. Some of the features may be different from the features on other compact passenger vehicles. Should you have any questions about the vehicle and how to safely operate its features, please use common sense and contact smart dealer representatives, who are available to help you.

smart is a vehicle manufactured by Daimler, distributed in the United States by Mercedes-Benz USA LLC, and in Canada by Mercedes-Benz Canada, and sold and serviced by independent, authorized electric drive smart centers.

Because of this vehicle's unique characteristics, we strongly recommend that you service and maintain the vehicle only at authorized smart service facilities. A list of service facilities is available by calling smart Customer Assistance representatives at:

1-800-762-7887 (in the USA)

1-877-627-8004 (in Canada)

Although we cannot prevent you from servicing the vehicle at facilities other than smart authorized facilities, this is not advisable.

Optional extras are identified with an asterisk*. The equipment in your vehicle may vary depending on the model, version and availability. smart is constantly bringing its vehicles up to the very latest state of the art and reserves the right to modify them in form, equipment and engineering.

Should you find that a particular feature in this manual is important to your decision to purchase the vehicle, we recommend that you personally check the vehicle to ensure that this feature has been installed before buying the vehicle.

The Operator's Manual and Scheduled Maintenance Guide/Warranty Booklet (USA only) or Service/Warranty Booklet (Canada only) belong to the vehicle. You should always keep these documents in the vehicle and make sure you pass them on to the next owner if and when you sell your smart.

Please contact an authorized electric drive smart center if you have any further questions.

The Technical Documentation team at Daimler wishes you many happy hours at the wheel.

4515840500

Index 4

Introduction 13

At a glance 21

Safety 29

Controls 51

Operation 111

Practical hints 159

Technical data 211

1, 2, 3 ...

12-volt battery
Charging 199
Indicator lamp 171
Notes 197
Removing and installing 199

A

ABS (Antilock Brake System) 46
Indicator lamp 167
Accessory weight 143
Accidents
Air bags 33
Acoustic Vehicle Indication* 48
Address change 15
Air bags 33
Children 33
Front, driver and passenger 36
Front, passenger 36
Head-thorax 37
Knee bag 37
Passenger front air bag off indicator lamp 28, 41
Safety guidelines 35
SRS indicator lamp 169
Thorax-pelvis 38
Window curtain 38
Air conditioning with climate control
Air distribution 102
Air recirculation mode 103
Air vents 101
Air volume 102
Control panel 101
Defrosting 103
Notes 99
Rear window defroster 103
Switching on/off 101
Temperature 101
Air pressure
see Tire inflation pressure
Air pressure (tires) 144
Air vents 101
Alarm system
see Anti-theft systems
Ambient lighting* 67
Anticorrosion/antifreeze 219, 220
Antiglare, Interior rear view mirror 61
Antilock Brake System
see ABS
Anti-theft systems 49
Anti-theft warning system 49
Electronic immobilizer 49
Interior motion sensor 49
Tow-away alarm 49
Aquaplaning
see Hydroplaning
Armrest 59
Aspect ratio (tires) 144
Audio system 95
Basic 96
Navigation/multimedia 96
Automatic headlamp mode 64
Automatic locking 53
AUX socket 96

B

Backrest
see Seats
Backup lamp 181
Bar (air pressure unit) 144
Batteries 197
Battery
Jump starting 200
Battery (key)
Replacing the transmitter battery 178
Battery coolant 125
Bead (tire) 144
Brake fluid 127
Checking 127
Brake lamp 181
Brake pedal 78
Brakes 148
Parking brake 77
Warning lamp 167
Bulbs
Front 180
Rear 181
Replacing 179

C

CAC (Customer Assistance Center) 18
California retail buyers and lessees, important notice for 14
Cargo compartment cover blind 104
CD player 95
Center console 27
Central locking
Automatic 53
Locking/unlocking from inside 53
Certification label 214
Charge level gauge 81
Charging
High-voltage battery 112
Charging cable
Connecting 117
Control element 116
Storing 115
Warming up 114
Children in the vehicle 42
Air bags 33
Indicator lamp, passenger front air bag off 41, 175
Infant and child restraint systems 43
OCS (Occupant Classification System) 39
Safety notes 42
Tether anchorage points 44
Child safety
see Children in the vehicle
Cockpit 22
Coin holder 106
Cold tire inflation pressure 144
Combination switch 66
Control system
Charge and depart menu 90
Charging mode display 87
Control lever 83
Introduction 83
Menus and submenus 89
Messages menu 93
Multifunction display 83
Odometer menu 89
Recuperation display 84
Reset menu 90
Settings menu 93
Start menu 90
Time menu 94
Coolant
Anticorrosion/antifreeze 219, 220
Battery 125
Capacities 218, 219
Drive system 125
Temperature warning lamp 172
Coolant temperature 152
Copyright 19
Cruise control 97
Curb weight 144
Customer Assistance Center (CAC) 18

D

Dashboard
see Instrument cluster
Data recording 19
Daytime running lamp mode 65
Deep water
see Standing water
Defroster
Rear window 103
Windshield 103
Department of Transportation
see DOT
Direction of rotation (tires) 137
Door control panel 28
Door handles 28
Doors
Locking/unlocking from outside ... 53
Opening from inside 54
DOT (Department of Transportation) 142, 144
Drinking and driving 147
Drive diagnostics
Indicator lamp 173
Warning lamp 173
Driving
Abroad 153
Coolant temperature 152
Hydroplaning 150
Instructions 76, 147
In winter 151
Safety systems 46

Through standing water 152
Tips, recuperation 81
Tips, transmission 81
Driving and parking
Safety notes 76
Driving safety systems 46
ABS 46
ESP® 47
Hydraulic brake assistant 48

E

ECO indicator 86
Electrical system
Improper work on or modifications 16
Power outlet 110
Electronic immobilizer 49
Electronic Power Steering
see EPS
Electronic Stability Program
see ESP®
Emergency, in case of
Hazard warning flasher 48, 68
Roadside Assistance 15
Emergency Tensioning Device
see ETD
Emission control
Information label 214
System warranties 13
Engine
Electronics 212
Starting 76
Turning off 79
EPS (Electronic Power Steering)
Warning lamp 170
ESP® (Electronic Stability Program) ... 47
Warning lamp 170
ETD (Emergency Tensioning Device) ... 33
Safety guidelines 35
Exterior lamp switch 64
Exterior lighting
Overview 180
Exterior rear view mirrors 61

F

Flat tire 187
Fluids
Capacities 218
Fog lamps 67, 180
Front air bags
see Air bags
Front compartment 123
Front lamps
Overview 180
Fuse chart 208
Fuses 205

G

GAWR (Gross Axle Weight Rating) 144
Global locking/unlocking 53
Glove box 106
Gross Axle Weight Rating
see GAWR
Gross Vehicle Weight
see GVW
Gross Vehicle Weight Rating
see GVWR
GVW (Gross Vehicle Weight) 144
GVWR (Gross Vehicle Weight Rating) .. 144

H

Halogen headlamps
see Headlamps
Hazard warning flasher 68
Headlamps
Automatic headlamp mode 64
Daytime running lamp mode 65
High-beam flasher 66
High-beam headlamps 66
Low-beam headlamps 64
Switch 64
Head-thorax air bags 37
Heated exterior rear view mirrors 61
Height adjustment
Seats 59
High-beam flasher 66
High-beam headlamps 66, 180
Indicator lamp 171
High-mounted brake lamp 181

High-voltage battery
Battery care 113
Charge level gauge 81
Charging (AC power socket) 114
Charging (control system) 92
Charging (private wallbox) 115
Charging (public charging station) 117
Charging cable 115
Charging cable warming 114
Cruise range 113
Discharged battery 113
Displaying available power 85
ECO indicator 86
Energy consumption 113
Intelligent charging management 123
Introduction 112
Notes 198
Outside temperatures 113
Overvoltage protection 114
Problems with the charging process 120
READY indicator 87
Terms of use 114
Warning label (wheel change) 196
Warning lamp 171
High-voltage disconnect device 18
Hill-start assist system 81
Hydraulic brake assistant 48
Hydroplaning 150

I

Identification labels 214
Identification number, vehicle (VIN) 215
Infant and child restraint systems
see Children in the vehicle
Inflation pressure
see Tires, Inflation pressure
Inside door handle 54
Instrument cluster 23, 25
Illumination 83
Lamps, indicator and warning 166
Instrument panel
see Instrument cluster
Instruments and controls
see Cockpit
Intelligent charging management
High-voltage battery 123
Interior motion sensor 49
Interior rear view mirror 61
Interior storage spaces
see Storage compartments
Intermittent wiping
Rear window wiper 70
Windshield wipers 69
Internet connection
Via mobile service module 122
Via powerline 122

J

Jump-starting 200

K

Key 52
Loss of 176
Replacing the transmitter battery 178
Kilopascal (air pressure unit) 144
Knee bag 37

L

Labels 214
Emission control information 214
Lamps, exterior
Exterior lamp switch 64
Switching on/off 64
Lamps, indicator and warning
12-volt-battery 171
ABS 167
Brakes 167
Coolant temperature 172
Drive diagnostics 173
EPS 170
ESP® 170
Fog lamps 67
High-beam headlamps 171
High-voltage battery 171
Low-beam headlamps 171
Low tire pressure/TPMS malfunction telltale 173

Overview (kilometers) 26
Overview (miles) 24
Passenger front air bag off 36, 175
Seat belt telltale 168
SRS 169
Turn signals 172
License plate lamps 181
Lighting 64
Ambient lighting* 67
Coming home function 66
Daytime running lamp mode 65
Exterior 64
Interior 68
Loading
see Vehicle loading
Locking the vehicle 52
Manually 177
Loss of
Key 176
Service and Warranty Information booklet 212
Low-beam headlamps 64, 180
Exterior lamp switch 64
Indicator lamp 171
Switching on 64

M

Maintenance 14
Manual headlamp mode (Low-beam headlamps) 64
Maximum loaded vehicle weight 144
Maximum load rating (tires) 144
Maximum permissible tire inflation pressure 144
Mirrors
Exterior rear view mirrors 61
Interior rear view mirror 61

N

Normal occupant weight 145
Number, vehicle identification (VIN) 215

O

Occupant Classification System
see OCS (Occupant Classification System)
Occupant distribution 145
Occupant safety
Air bags 33
Children and air bags 33
Children in the vehicle 42
Infant and child restraint systems 43
Introduction 30
OCS (Occupant Classification System) 39
Passenger front air bag off indicator lamp 39
Seat belts 31, 35
SRS indicator lamp, malfunction . 169
OCS (Occupant Classification System) 39
Self-test 42
On-board Diagnostics Socket (OBD) ... 213
Online access 120
Operating range 14
Operating safety 16
Outside temperature display 87
Overhead control panel 28

P

Paintwork care 157
Panic alarm 45
Parcel nets 104, 107
Parking 77
Parking brake 77
Parking lamps 180
Parts service 212
PASS AIR BAG OFF indicator lamp
see Passenger front air bag off indicator lamp
Passenger front air bag 36
Passenger front air bag off indicator lamp 28, 36, 175
Passenger safety
see Occupant safety
Passenger seat 59
Pedals 147

Power assistance 147
Power gauge 81
Power outlet 110
Power washer 156
Practical hints
Display messages 161
Flat tire 187
Fuses 205
Jump starting 200
Replacing bulbs 179
Replacing transmitter battery 178
Replacing wiper blades 185
Towing 203
Unlocking/locking manually 177
Warning and indicator lamps 166, 175
What to do if 166
Where will I find...? 160
Problems with your vehicle 18
Product information 13
Production options weight 145
PSI (air pressure unit) 145

R

Radio 95
Radio transmitters 152
Rain-light sensor 69
READY indicator 87
Rear lamps
Overview 181
Rear window defroster 103
Rear window wiper/washer 70
Replacing wiper blade 185
Recommended tire inflation pressure 128, 145
Remote control
see Key
Replacing bulbs 179
Reporting safety defects 18
Restraint systems
see Occupant safety
Rims 145, 216
Roadside Assistance 15
Roof
see Soft top system

S

Safety
Driving safety systems 46
Occupant safety 30
Reporting defects 18
Safety belts
see Seat belts
Saving energy 149
Seat belt force limiter 33
Seat belts 31
Children in the vehicle 42
Fastening 62
Proper use of 31
Safety guidelines 35
Safety notes 31
Telltale 168
Seat heating 60
Seating capacity 134
Seats 58
Adjustment 58
Armrest 59
Heating 60
Passenger seat 59
Self-test
OCS (Occupant Classification System) 42
SRS 30
Service
see Maintenance
Service, parts 212
Service and warranty
Booklet 212
Service flap 123
Service life (tires) 137
Setting the departure time (Control system) 90
Setting the maximum charge current (Control system) 92
Side marker lamps 180
Sidewall (tires) 145
Side windows
Operation 75
Signs and labels 214
smart surround sound system 97
Snow chains 146

Snow tires
see Winter tires
Soft top system 70
Cleaning the soft top fabric 157
Locking rear soft top manually 178
Mounting the side rails 74
Opening and closing the rear soft top 56, 72
Opening and closing the retractable soft top 55, 71
Removing the side rails 73
Storing the side rails 74
Sound package 97
SRS (Supplemental Restraint System)
Indicator lamp 169
Standing water, driving through 152
Starter switch positions 57
Starting the engine 76
Steering wheel paddle shifters 79
Storage compartments 106
Coin holder 106
Door pockets 106
Drawer 107
Glove box 106
in the tailgate 107
Parcel nets 107
Storage tray in center console 107
Storage trays next to steering wheel 106
Storing tires 138
Sun screen 109
Sun visors 109

T

Tailgate
Closing 55, 57
Opening 54, 56
Tail lamps 181
Technical data
Brake fluid 218
Coolant 219
Dimensions and weights 215
Identification labels 214
Rims and tires 216
Service fluids and capacities 217
Windshield/rear window washer system 218
Temperature
Coolant 152
Interior temperature 101
Outside 87
Tether anchorage points
see Children in the vehicle
Thorax-pelvis side air bags 38
Tightening torque
Wheels 139
TIN (Tire Identification Number) 142, 145
Tire and Loading Information placard 133
Tire and loading terminology 143
Tire Identification Number
see TIN
Tire inflation pressure
Checking 130
Important notes on 129
Placard on driver's door B-pillar 133
Tire labeling 139
Tire load rating 145
Tire ply composition and material used 145
Tire Pressure Monitoring System (TPMS) 131
Tire repair kit 160, 187
Tires 127, 216
Air pressure 128
Care and maintenance 137
Cleaning 138
Direction of rotation, spinning . . 137
Driving instructions 150
Flat tire 187
Important notes on tire inflation pressure 129
Inflation pressure 130
Information placard 133
Inspection 137
Labeling 139
Load rating 145
Ply composition and material used 145

Problems under-/overinflation ... 130
Retreads ... 127
Rims and tires (technical data) ... 216
Rotation ... 139
Service life ... 137
Sizes ... 216
Snow chains ... 146
Speed rating ... 141, 145, 151
Storing ... 138
Temperature ... 130, 139
Terminology ... 143
Tire Identification Number ... 142, 145
Tire Pressure Monitoring System (TPMS) ... 131
Traction ... 138, 145, 150
Tread ... 145
Tread depth ... 137, 146
Treadwear indicators ... 137, 146
Vehicle maximum load on ... 146
Wheel change ... 195
Winter tires ... 146, 216
Tire speed rating ... 141, 145
Top tether
see Children in the vehicle
Total load limit ... 145
Tow-away alarm ... 49
Towing ... 203
Traction ... 145, 150
Transmission
Driving tips ... 81
Hill-start assist system ... 81
Shifting procedure ... 79
Transmission position indicator ... 84
Transmitting power values ... 213
Traveling abroad ... 153
Tread (tires) ... 145
Tread depth (tires) ... 137, 146
Treadwear indicators (tires) ... 137, 146
Turning off the engine ... 79
Turn signal lamps ... 180
Turn signals ... 66
Indicator lamps ... 172

U

Uniform Tire Quality Grading Standards ... 138, 146
Unlocking the vehicle ... 52
Manually ... 177
USB socket ... 96

V

Vehicle
Bulbs ... 179
Care ... 153
Identification Number (VIN) ... 215
Locking/unlocking ... 52
Modifications and alterations, Operating safety ... 16
Towing ... 203
Unlocking/locking manually ... 177
Vehicle Homepage
Data protection ... 121
Functions ... 121
General information ... 120
Internet connection ... 122
Personal area ... 121
Vehicle Identification Number (VIN) ... 215
Vehicle lighting ... 64
Vehicle loading
Instructions ... 108
Load limit ... 135
Roof rack ... 108
Terminology ... 143
Vehicle maximum load on the tire ... 146
Vehicle specification ... 215
Vehicle washing
see Vehicle care

W

Warning signals
Brake pads ... 177
Door ... 176
Lighting ... 176
Parking ... 177
Parking brake ... 176
Seat belt reminder system ... 168, 176
Warranty coverage ... 212

Warranty information 13
Washer fluid
Mixing ratio 218
Refilling 126
Wiping 70
Washer jet nozzles 187
Washing the vehicle 153
Wheel change 195
Wheels, sizes 216
Wheels, Tires and 127
Where will I find...?
Tire repair kit 160
Window curtain air bags 38
Windshield
Washer fluid 70, 218
Wipers 69
Windshield wipers 69
Adjusting washer jet nozzles 187
Rain-light sensor 69
Replacing wiper blades 185
Winter driving
Driving instructions 151
Snow chains 146
Tires 146
Winter tires 146, 216

Product information

We recommend using Genuine smart Parts as well as conversion parts and accessories explicitly approved by smart for your vehicle model.

We have tested these parts to determine their reliability, safety and special suitability for smart vehicles.

We are unable to make an assessment for other products and therefore cannot be held responsible for them, even if in individual cases an official approval or authorization by governmental or other agencies should exist. Use of such parts and accessories could adversely affect the safety, performance or reliability of your vehicle. We strongly recommend that you not use them.

Genuine smart Parts as well as conversion parts and accessories approved by us are available at your authorized electric drive smart center. Due to the technical requirements of the smart fortwo electric drive and its high-voltage power systems, the vehicle should be serviced only at an authorized electric drive smart center. In addition, you will receive comprehensive information on permissible technical modifications and expert installations on the operation and maintenance of the smart fortwo electric drive.

Operator's Manual

This Operator's Manual contains a great deal of useful information. We urge you to read it carefully and familiarize yourself with the vehicle before driving.

For your own safety and longer service life of the vehicle, we urge you to follow the instructions and warnings contained in this manual. Ignoring them could result in damage to the vehicle or personal injury to you or others. Vehicle damage caused by failure to follow instructions is not covered by the smart Limited Warranty.

Your vehicle may have some or all of the equipment described in this manual. Therefore, you may find explanations for optional equipment not installed in your vehicle. If you have any questions about the operation of any equipment, your authorized electric drive smart center will be glad to demonstrate the proper procedures.

We continuously strive to improve our product, and ask for your understanding that we reserve the right to make changes in design and equipment. Therefore, information, illustrations and descriptions in this Operator's Manual might differ from your vehicle.

Optional equipment is also described in this manual, including operating instructions wherever necessary. Since they are special-order items, the descriptions and illustrations herein may vary slightly from the actual equipment of your vehicle.

If there are any equipment details that are not shown or described in this Operator's Manual, your authorized electric drive smart center will be glad to inform you of correct care and operating procedures.

The Operator's Manual and Maintenance/ Warranty Booklet (USA only) or Service/ Warranty Booklet (Canada only) are important documents and should be kept with the vehicle.

Warranty information

The smart USA Warranty booklet (USA only) or the Warranty booklet (Canada only) contains detailed information about the warranties covering your smart, including:

- smart USA Limited Warranty (USA only)
- New Vehicle Limited Warranty (Canada only)
- Emission System Warranty
- Emission Performance Warranty

- Corrosion Warranty
- California, Connecticut, Maine, Massachusetts, New York, Pennsylvania, Rhode Island, and Vermont Emission Control System Warranty
- smartmove Assistance (Canada only)
- State Warranty Enforcement Laws (Lemon Laws, USA only)

Important notice for California retail buyers and lessees of smart automobiles

Under California law you may be entitled to a replacement of your vehicle or a refund of the purchase price or lease price, if Mercedes-Benz USA LLC and/or its authorized repair or service facilities fail to fix one or more substantial defects or malfunctions in the vehicle that are covered by its express warranty after a reasonable number of repair attempts. During the period of 18 months from original delivery of the vehicle or the accumulation of 18000 miles (approximately 29000 km) on the odometer of the vehicle, whichever occurs first, a reasonable number of repair attempts is presumed for a retail buyer or lessee if one or more of the following occurs:

(1) the same substantial defect or malfunction results in a condition that is likely to cause death or serious bodily injury if the vehicle is driven, that defect or malfunction has been subject to repair two or more times, and you have directly notified Mercedes-Benz USA LLC in writing of the need for its repair,

(2) the same substantial defect or malfunction of a less serious nature than category (1) has been subject to repair four or more times and you have directly notified us in writing of the need for its repair, or

(3) the vehicle is out of service by reason of repair of the same or different substantial defects or malfunctions for a cumulative total of more than 30 calendar days.

Written notification should not be sent to a dealer, it should be addressed to:

Mercedes-Benz USA LLC

One Mercedes Drive

Montvale, NJ 07645

Maintenance

The Scheduled Maintenance Guide (USA) and Service Booklet (Canada) describes all the necessary maintenance work which should be performed at regular intervals. It is important that you service your vehicle in accordance with the prescribed maintenance schedule. Failure to do so may render your vehicle unsafe, it may affect the durability of the vehicle, and it may otherwise void the limited, express warranty.

Always have the Scheduled Maintenance Guide (USA) or Service Booklet (Canada) with you when you take the vehicle to your authorized electric drive smart center for service. The service advisor will record each service in the booklet for you.

Operating range

If you plan a long distance trip, please be aware that:

- You will need to have access to an AC power socket or a private wallbox to

charge the high-voltage battery when no public charging station is available.

- The operating range of your vehicle is limited due to the availability of public charging stations.
- Public charging stations may not be available at all in some areas.

In light of the foregoing, proper care must be exercised in the planning of a long distance trip with the vehicle. smart is not responsible for the availability of public charging stations.

Roadside Assistance

The smartmove Assistance (Canada) and smart 1 service (USA) Program provides factory trained technical help in the event of a breakdown. Calls to the toll-free Roadside Assistance number

1-800-762-7887 (in the USA)

1-877-627-8004 (in Canada)

will be answered by smart Customer Assistance Representatives 24 hours a day, 365 days a year.

Roadside Assistance will be provided in accordance with standard program guidelines which include providing service to the vehicle up to a reasonable distance from a paved roadway. We will make every effort to assist in a breakdown situation, however, the accessibility of your vehicle will be determined by our authorized electric drive smart center technician or the tow service provider on a case-by-case basis and may be a factor in our ability to respond.

Additional charges may be applicable for a breakdown location determined not to be a reasonably accessible roadside location as determined by our authorized technician and tow service provider.

For additional information refer to the smart Roadside Assistance Program brochure (USA) or the Warranty Booklet (Canada) in your vehicle literature portfolio.

Change of address or ownership

In the USA: If you change your address, be sure to send in the "Information Change Card" found in the Warranty Information Booklet.

In Canada: If you change your address, be sure to send in the "Change of Address Notice" found in the Warranty Booklet, or simply call the Customer Service at 1-800-387-0100.

Maintaining your current address information with smart will enable us to contact you should important new information about the vehicle, such as recalls, become available.

If you sell your smart, please leave all literature with the vehicle to make it available to the next operator.

In the USA: If you bought this vehicle used, be sure to send in the "Information Change Card" found in the Warranty Information Booklet.

In Canada: If you bought this vehicle used, be sure to send in the "Notice of Pre-Owned Vehicle Purchase" found in the Warranty Booklet, or call the Customer Service at 1-800-387-0100.

Operating your vehicle outside the USA or Canada

If you plan to operate your vehicle in foreign countries, please be aware that:

- Service facilities or replacement parts may not be readily available.
- The AC power sockets in some countries, especially overseas, require different plugs on the charging cable.
- Charging stations may not be available.

Operating safety

WARNING

Some safety systems only function while the drive system is switched on. You should therefore never switch off the drive system while driving.

WARNING

Work improperly carried out on electronic components and associated software could cause them to cease functioning. Because the vehicle's electronic components are interconnected, any modifications made may produce an undesired effect on other systems. Electronic malfunctions could seriously impair the operating safety of your vehicle.

See an authorized electric drive smart center for repairs or modifications to electronic components.

Improper work or modifications on other vehicle systems could also have a negative impact on the operating safety of the vehicle.

WARNING

Heavy blows against the vehicle underbody or tires/wheels, for example when running over an obstacle, road debris or a pothole, may cause serious damage and impair the operating safety of your vehicle.

If you feel a sudden significant vibration or ride disturbance, or you suspect that damage to your vehicle has occurred, you should turn on your hazard warning flashers, carefully slow down, and drive with caution to an area which is a safe distance from the road.

Inspect the vehicle underbody and tires/wheels for possible damage. If the vehicle appears unsafe, have it towed to the nearest authorized electric drive smart center or other maintenance or repair facility that is qualified to work on smart electric vehicles for further inspection or repairs.

WARNING

A vehicle with an electric motor produces significantly lower noise levels than a vehicle with a combustion engine. Other motorists or pedestrians, especially those who are visually or hearing impaired, may be unable to hear your vehicle while it is in motion. This is particularly true when driving at lower speeds and during parking maneuvers. At all times, it is the responsibility of the driver to be aware of their surroundings, especially in these low speed situations. Otherwise other road users could be seriously or fatally injured.

Vehicles equipped with an Acoustic Vehicle Indication* emit a certain noise. Thus, your vehicle will be better noticed by other road users at low speeds (▷ page 48).

Danger of electric shock

P08.00-2007-31

The components of the drive system are indicated by yellow warning labels to make you aware of high voltage.

High-voltage cables are orange-colored.

WARNING

Due to the high-voltage technology, electrical leads under high voltage are installed in the vehicle. For this reason, work on the vehicle may only be carried out by specially trained technicians.

For safety reasons, smart recommends all work to be carried out by a smart service

* optional

partner which is qualified for smart electric drive.

Particular care should be taken involving all areas which are in the vicinity of high voltage parts, e.g. parts in the engine compartment. Orange-colored cables and their respective sockets carry high voltage and must not be damaged.

Serious injury or death can result if you:

- remove the covers of components which are labeled with a warning sticker.
- handle components of the high-voltage vehicle electrical system.
- open the housing.
- disconnect plug connectors.
- come into contact with components or orange-colored cables of the high-voltage vehicle electrical system following an accident.
- come into contact with orange-colored cables or their damaged plug connectors.
- come into contact with damaged components of the high-voltage vehicle electrical system.

Have the damaged orange-colored cables or their damaged plug connectors replaced immediately at an authorized electric drive smart center. The service partner must have the required knowledge and tools to carry out the necessary work. For safety reasons, smart recommends using a smart center which is qualified for smart electric drive. Particularly for safety-relevant work and work on safety-relevant vehicle systems, servicing by an authorized electric drive smart center is essential.

Do not remove the high-voltage battery of the high-voltage vehicle electrical system. Have the required work carried out by an authorized electric drive smart center. smart recommends that you use an authorized electric drive smart center.

⚠ WARNING

The high-voltage battery of the drive system is located under the vehicle's underbody. When the pressure inside the high-voltage battery exceeds a certain value, for example in case of a vehicle fire, inflammable gas will escape via a duct. The inflammable gas escapes to an area under the vehicle. This prevents the high-voltage battery from exploding.

Stay away from this area of the vehicle.

When you carry out common works like replacing bulbs or checking coolant level, make sure that

- the ignition is switched off
- the charging cable for the high-voltage battery is disconnected.

Automatic switch-off of the high-voltage system

The high-voltage system will be automatically switched off, in the event:

- of an accident in which the restraint systems are triggered
- of a short circuit in the high-voltage system is detected
- that an electric connection in the high-voltage system has been disconnected

This helps to avoid that you get in contact with high-voltage.

High-voltage battery

⚠ WARNING

The high-voltage battery of the drive system is located under the vehicle's underbody. When the pressure inside the high-voltage battery exceeds a certain value, for example in case of a vehicle fire, inflammable gas will escape via a duct. The inflammable gas escapes to an area under

the vehicle. This prevents the high-voltage battery from exploding.

Stay away from this area of the vehicle.

High-voltage disconnect device

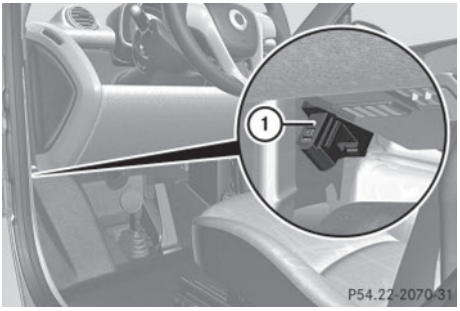

Your vehicle is equipped with a high-voltage disconnect device ① to disable the vehicle's high-voltage system.

! The high-voltage system must only be switched off at vehicle standstill by specially trained service engineers. Otherwise the high-voltage system may be damaged.

Proper use of the vehicle

Proper use of the vehicle requires that you are familiar with the following information and rules:

- the safety precautions in this manual
- the "Technical data" section in this manual
- traffic rules and regulations
- motor vehicle laws and safety standards

⚠ WARNING

Various warning labels are attached to your vehicle. These warning labels are intended to make you and others aware of various risks. You should not remove any of these warning labels unless explicitly instructed to do so by information on the label itself. Removal of any of these labels may cause you and others to be unaware of certain risks which may result in an accident and/or personal injury.

Problems with your vehicle

If you should experience a problem with your vehicle, particularly one that you believe may affect its safe operation, we urge you to immediately contact an authorized electric drive smart center to have the problem diagnosed and corrected if required. Do not drive the vehicle if you believe it may not be safely operated. If the matter is not handled to your satisfaction, please discuss the problem with the smart center management, or if necessary contact us at one of the following addresses:

In the USA:

Mercedes-Benz USA LLC

One Mercedes Drive

Montvale, NJ 07645

In Canada:

Customer Relations Department

98 Vanderhoof Avenue

Mercedes-Benz Canada, Inc.

Toronto, Ontario, M4G 4C9

Reporting safety defects

For the USA only: The following text is published as required of manufacturers under Title 49, Code of U.S. Federal Regulations, Part 575 pursuant to the National Traffic and Motor Vehicle Safety Act of 1966.

If you believe that your vehicle has a defect which could cause a crash or could cause injury or death, you should immediately inform the National Highway Traffic Safety Administration (NHTSA) in addition to notifying Mercedes-Benz USA LLC.

If NHTSA receives similar complaints, it may open an investigation, and if it finds

that a safety defect exists in a group of vehicles, it may order a recall and remedy campaign. However, NHTSA cannot become involved in individual problems between you, your dealer, or Mercedes-Benz USA LLC.

To contact NHTSA, you may call the Vehicle Safety Hotline toll-free at 1-888-327-4236 (TTY: 1-800-424-9153); go to http://www.safercar.gov ; or write to: Administrator, NHTSA Headquarters, 1200 New Jersey Avenue, SE, West Building, Washington, DC 20590. You can also obtain other information about motor vehicle safety from http://www.safercar.gov.

Vehicle data recording

Information regarding electronic recording devices

(Including notice pursuant to California Code § 9951)

Please note that your vehicle is equipped with devices that can record vehicle systems data.

This information helps, for example, to diagnose vehicle systems after a collision and to continuously improve vehicle safety.
smart may access the information and share it with others

- for safety research or vehicle diagnosis purposes
- with the consent of the vehicle owner or lessee
- in response to an official request by law enforcement or other government agency
- for use in dispute resolution involving smart, its affiliates or sales/service organization and/or
- as otherwise required or permitted by law

Information on copyright

General information

Information on license for free and open-source software used in your vehicle and its electronic components is available on the following website:

http://www.mercedes-benz.com/opensource

Cockpit 22
Instrument cluster (miles) 23
Instrument cluster (kilometers) 25
Center console 27
Overhead control panel 28
Door control panel 28

Cockpit

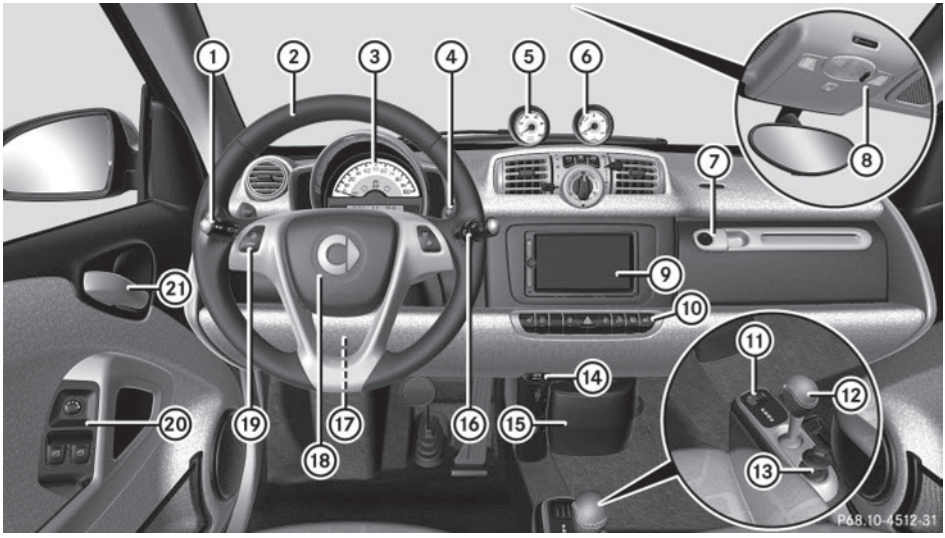

	Function	Page
①	Exterior lamp switch	64
②	Steering wheel	
③	Instrument cluster	23
④	Steering wheel paddle shifters*	79
⑤	Charge level gauge	81
⑥	Power gauge	81
⑦	Glove box AUX/USB sockets*	106 96
⑧	Overhead control panel	28
⑨	Radio	95
⑩	Center console switches	27
⑪	Coin holder Retractable soft top switch[1]	106 72

	Function	Page
⑫	Gear selector lever	79
⑬	Starter switch	57
⑭	Auxiliary power outlet	110
⑮	Storage tray*	107
⑯	Wiper switch Cruise control switch* Control lever (control system)	69 97 83
⑰	On-board Diagnostics Socket (OBD)	213
⑱	Horn	
⑲	Cruise control buttons*	97
⑳	Door control panel	28
㉑	Inside door handle	54

[1] cabriolet only.

Instrument cluster (miles)

Miles

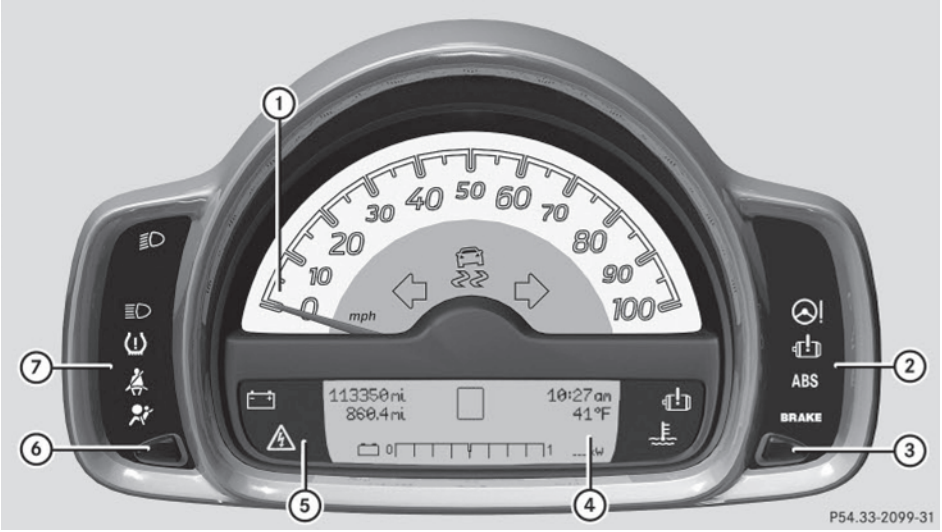

Instrument cluster (U.S. vehicles)

	Function	Page
①	Speedometer	
②	Right indicator and warning lamp display	24
③	Adjusting instrument cluster illumination Adjusting ambient lighting*	83 67
④	Multifunction display	83

	Function	Page
⑤	Center indicator and warning lamp display	24
⑥	Resetting trip odometer Resetting trip computer	89 90
⑦	Left indicator and warning lamp display	24

* optional

Indicator and warning lamps

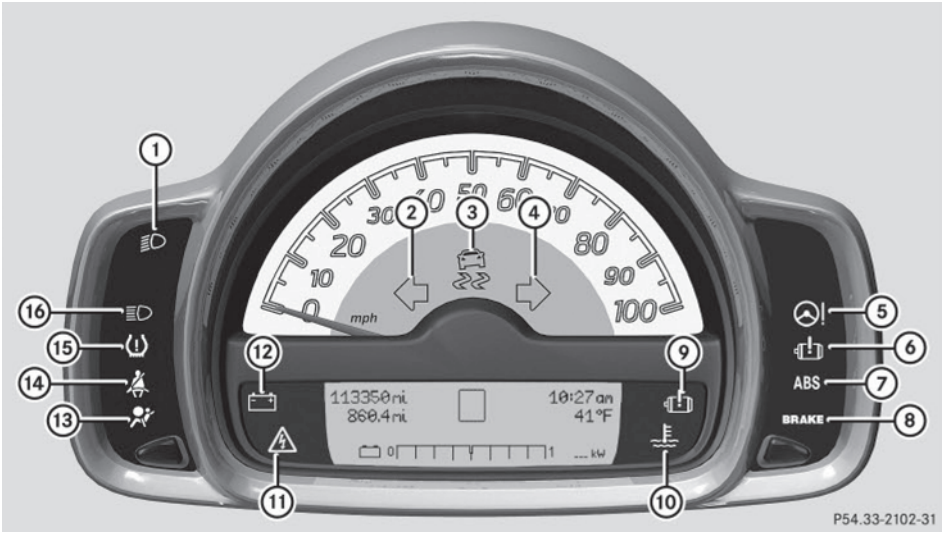

	Function	Page
①	Low-beam headlamp indicator lamp	64, 171
②	Left turn signal indicator lamp	66, 172
③	ESP® warning lamp	170
④	Right turn signal indicator lamp	66, 172
⑤	EPS warning lamp	170
⑥	Drive diagnostics indicator lamp	173
⑦	ABS indicator lamp	167
⑧	Brake warning lamp	167
⑨	Drive diagnostics warning lamp	173

	Function	Page
⑩	Coolant temperature warning lamp	172
⑪	High-voltage battery warning lamp	171
⑫	12-volt battery indicator lamp	171
⑬	SRS indicator lamp	169, 169
⑭	Seat belt telltale	168
⑮	Combination low tire pressure/TPMS malfunction telltale*	173
⑯	High-beam headlamp indicator lamp	66, 171

* optional

Instrument cluster (kilometers)

Kilometers

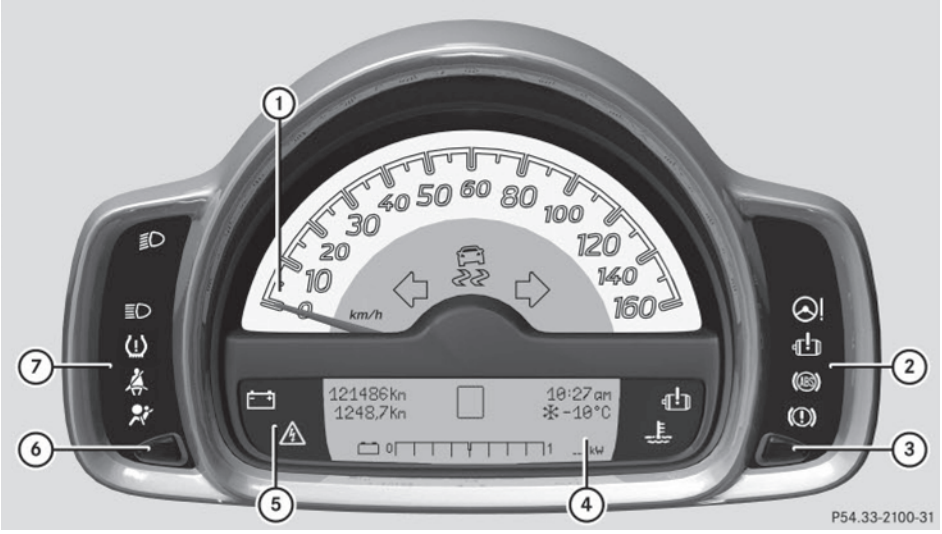

Instrument cluster (Canada vehicles)

	Function	Page
①	Speedometer	
②	Right indicator and warning lamp display	26
③	Adjusting instrument cluster illumination Adjusting ambient lighting*	83 67
④	Multifunction display	83

	Function	Page
⑤	Center indicator and warning lamp display	26
⑥	Resetting trip odometer Resetting trip computer	89 90
⑦	Left indicator and warning lamp display	26

* optional

Indicator and warning lamps

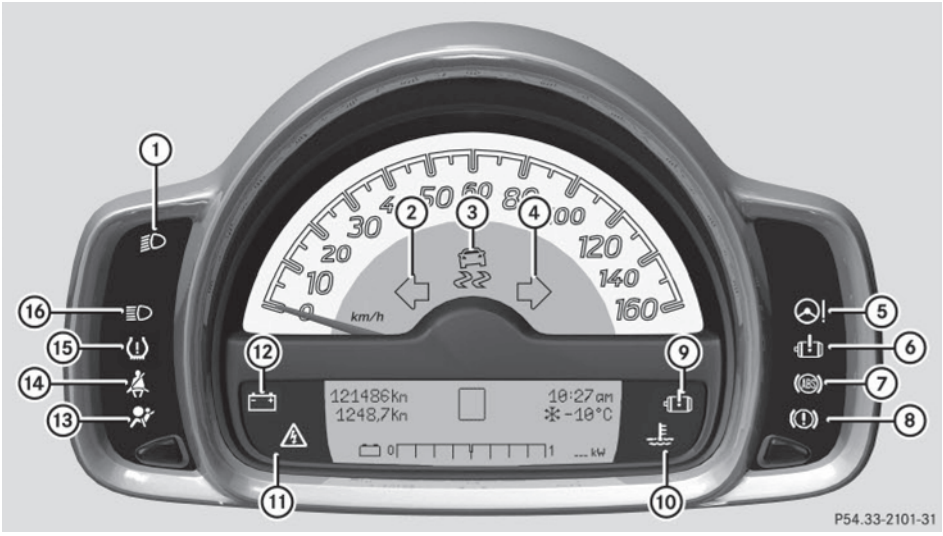

	Function	Page
①	Low-beam headlamp indicator lamp	64, 171
②	Left turn signal indicator lamp	66, 172
③	ESP® warning lamp	170
④	Right turn signal indicator lamp	66, 172
⑤	EPS warning lamp	170
⑥	Drive diagnostics indicator lamp	173
⑦	ABS indicator lamp	167
⑧	Brake warning lamp	167
⑨	Drive diagnostics warning lamp	173

	Function	Page
⑩	Coolant temperature warning lamp	172
⑪	High-voltage battery warning lamp	171
⑫	12-volt battery indicator lamp	171
⑬	SRS indicator lamp	169
⑭	Seat belt telltale	168
⑮	Combination low tire pressure/TPMS malfunction telltale*	173
⑯	High-beam headlamp indicator lamp	66, 171

* optional

Center console

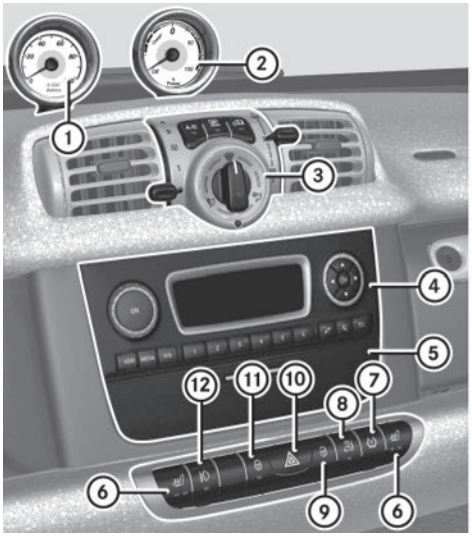

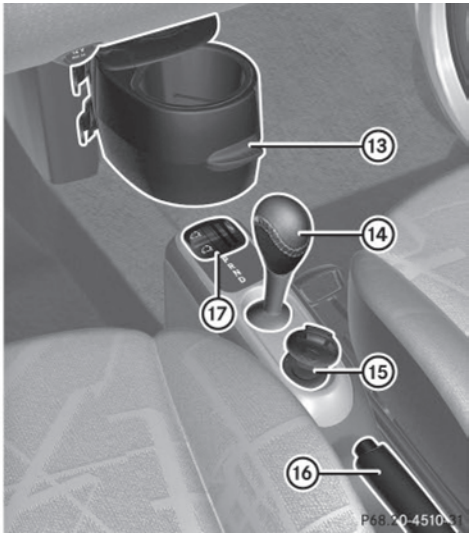

	Function	Page
①	Charge level gauge	81
②	Power gauge	81
③	Air conditioning with climate control	99
④	Radio	95
⑤	Drawer	107
⑥	Switching seat heating* on/off	60
⑦	Restarting TPMS button	131
⑧	Switching tow-away protection*/interior motion sensor* on/off	49
⑨	Central unlocking switch	53

	Function	Page
⑩	Hazard warning flasher switch	68
⑪	Central locking switch	53
⑫	Switching front fog lamps* on/off	67
⑬	Storage tray*	107
⑭	Gear selector lever	79
⑮	Starter switch	57
⑯	Parking brake lever	77
⑰	Coin holder	106
	Retractable soft top switch[2]	72

[2] cabriolet only.

* optional

Overhead control panel

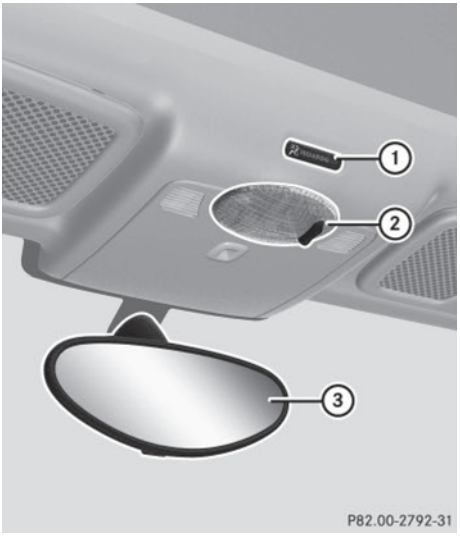

	Function	Page
①	Passenger front air bag off indicator lamp	41, 166
②	Switching interior lighting on/off	68
③	Interior rear view mirror	61

Door control panel

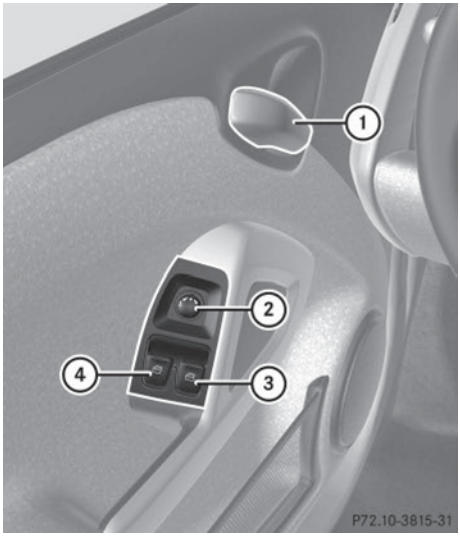

	Function	Page
①	Inside door handle	54
②	Adjusting exterior rear view mirrors	61
③	Opening and closing passenger side window	75
④	Opening and closing driver's side window	75

Occupant safety 30
Panic alarm 45
Driving safety systems 46
Anti-theft systems 49

Occupant safety

Introduction

The smart vehicle is equipped with seat belts and dual stage air bags to protect you in a crash. However, children can be killed or seriously injured by an inflating air bag. Indeed, there is a stronger risk of serious death or bodily injury when an air bag deploys on a child positioned in a rear-facing child seat in the passenger seat. Because this vehicle has only two front seats and no backseat, it is limited as are other two-seat vehicles, in the extent to which it may restrain children traveling in the passenger front seat. Many states have laws against placing children of certain ages in the front seat of a vehicle that has both front and back seats. Those laws make exceptions to permit children to be restrained in the front seat of two seat vehicles. Special instructions and warnings are provided below about when and if you may restrain a child in the passenger seat of the smart vehicle. Under certain circumstances, it is appropriate for the passenger air bag not to operate when a child is restrained in a car seat in the passenger seat, and this vehicle is equipped with technology to accomplish this. Please pay very close attention to the instructions and warnings below, particularly as they relate to children.

In this section you will learn the most important facts about the restraint system components of the vehicle.

The restraint systems are:

- Seat belts (▷ page 31)
- Child restraints (▷ page 43)

Additional protection potential is provided by:

- **S**upplemental **R**estraint **S**ystem (SRS) with
  - Air bags (▷ page 33)
  - Air bag control unit (with crash sensors)
  - Emergency Tensioning Devices and seat belt force limiters (▷ page 33)
- Air bag system components with
  - Passenger front air bag off indicator lamp (▷ page 41)
  - Passenger seat with **O**ccupant **C**lassification **S**ystem (OCS) (▷ page 39)

Although independent systems, their protective functions work in conjunction with each other.

For information on infants and children traveling with you in the vehicle and restraint systems for infants and children, see "Children in the vehicle" (▷ page 42).

The SRS system conducts a self-test when the ignition is switched on and in regular intervals while the engine is running. This facilitates detection of malfunctions. The SRS indicator lamp in the instrument cluster comes on when the ignition is switched on and goes out after approximately four seconds.

The SRS components are in operational readiness if the SRS indicator lamp is not lit when the engine is running.

A malfunction in the system has been detected if the SRS indicator lamp

- fails to go out after approximately 4 seconds after the ignition was switched on
- does not come on at all
- comes on after the engine was started or while driving

WARNING

Modifications to or work improperly conducted on restraint systems (such as seat

belts and anchors, Emergency Tensioning Devices, seat belt force limiters or air bags) or their wiring, as well as tampering with interconnected electronic systems, can lead to the restraint systems no longer functioning as intended. Air bags or Emergency Tensioning Devices, for example, could deploy inadvertently or fail to deploy in accidents in which they otherwise should deploy (although the deceleration threshold for air bag deployment is exceeded). Therefore, never modify the restraint systems. Do not tamper with electronic components or their software.

⚠ WARNING

In the event that the SRS indicator lamp comes on while driving or does not come on at all, the SRS self-check has detected a malfunction. For your safety, we strongly recommend that you immediately but safely pull the vehicle off of the roadway and stop driving. Contact an authorized electric drive smart center immediately to have the system checked; otherwise the SRS may not deploy when needed in an accident, which could result in serious or fatal injury, or it might deploy unexpectedly and unnecessarily which could also result in injury.

In addition, improper repair work on the SRS creates a risk of rendering the SRS inoperative or causing unintended air bag deployment. Work on the SRS must therefore only be performed by qualified technicians. Contact an authorized electric drive smart center. If it is necessary to modify an air bag system to accommodate a person with disabilities, contact your local authorized electric drive smart center.

Seat belts

The use of seat belts and infant and child restraint systems is required by law in all 50 states, the District of Columbia, the U.S. territories and all Canadian provinces and territories.

Even where this is not the case, all vehicle occupants should have their seat belts fastened whenever the vehicle is being operated.

For more information, see "Fastening the seat belts" (▷ page 62).

For information on infants and children traveling with you in the vehicle and restraint systems for infants and children, see "Children in the vehicle" (▷ page 42).

⚠ WARNING

Always fasten your seat belt before driving. Always make sure all of your passengers are properly restrained.

Failure to wear and properly fasten and position your seat belt greatly increases your risk of injuries and their likely severity in an accident. You and your passenger should always wear seat belts.

If you are ever in an accident, your injuries can be considerably more severe without your seat belt properly buckled.

Without your seat belt buckled, you are much more likely to hit the interior of the vehicle or be ejected from it. You can be seriously injured or killed.

In the same crash, the possibility of injury or death is lessened if you are properly wearing your seat belt. Air bags can only protect you if you are properly wearing your seat belt.

⚠ WARNING

Never ride in a moving vehicle with the seat backrest in an excessively reclined position as this can be dangerous. You could slide under the seat belt in a collision. If you slide under it, the belt would apply force at the abdomen or neck, causing serious or even fatal injuries. The seat backrest and seat belt provide the best restraint when the wearer is in a position

that is as upright as possible and the belt is properly positioned on the body.

⚠ WARNING

Never let more people ride in the vehicle than there are seat belts available. Make sure everyone riding in the vehicle is correctly restrained with a separate seat belt. Never use a seat belt for more than one person at a time.

⚠ WARNING

Seat belts of a vehicle involved in an accident must be inspected by smart. Only then is it possible to determine whether the seat belts were damaged or stressed in the accident. Damaged or stressed seat belts may not properly protect you in a subsequent accident.

Only use seat belts which have been approved by smart.

Do not make any modifications to the seat belts. This can lead to unintended activation of the Emergency Tensioning Devices (ETDs) or to their failure to activate when necessary.

Do not bleach or dye seat belts as this may severely weaken them. In a crash, they may not be able to provide adequate protection.

Have all work carried out only by qualified technicians. Contact an authorized electric drive smart center.

⚠ WARNING

USE SEAT BELTS PROPERLY

- Seat belts can only work when used properly. Never wear seat belts in any other way than as described in this section, as that could result in serious injuries in case of an accident.
- Each occupant should wear their seat belt at all times, because seat belts help reduce the likelihood of and potential severity of injuries in accidents, including rollovers. The integrated restraint system includes SRS (driver front air bag, passenger front air bag, head-thorax air bags) and Emergency Tensioning Devices (ETDs) with seat belt force limiters.

  The system is designed to enhance the protection provided by secured seat belts in certain frontal and side impacts.
- Never wear the shoulder belt under your arm, against your neck or off your shoulder. Doing so may cause your body to move too far forward in a frontal crash, which would increase the chance of head and neck injuries. The seat belt would also apply too much force to the ribs or abdomen, which could severely injure internal organs such as your liver or spleen.
- Never wear seat belts over rigid or breakable objects in or on your clothing, such as eyeglasses, pens, keys, etc., as these might cause injuries.
- Position the lap belt as low as possible on your hips and not across the abdomen. If the lap seat belt is positioned across your abdomen, it could cause serious injuries in a crash.
- Never use a seat belt for more than one person at a time. Do not fasten a seat belt around a person and another person or other objects at the same time.
- Seat belts should not be worn twisted. In a crash, you would not have the full width of the seat belt to manage impact forces. The twisted seat belt against your body could cause injuries.
- Pregnant women should also always use a lap-shoulder belt. The lap belt portion should be positioned as low as possible on the hips to avoid any possible pressure on the abdomen.
- Never place your feet on the instrument panel, dashboard or on the seat. Always

keep both feet on the floor in front of the seat.

- When using a seat belt to secure infant or toddler restraints or children in booster seats, always follow the child seat manufacturer's instructions.

Emergency Tensioning Devices (ETDs) and seat belt force limiters

The seat belts are equipped with Emergency Tensioning Devices and seat belt force limiters.

Emergency Tensioning Devices are designed to activate in the following cases:

- in frontal or rear-end impacts exceeding the system deployment threshold
- if the restraint systems are operational and functioning correctly
- in collisions with high vehicle deceleration/acceleration in the longitudinal direction, e.g. a head-on collision
- on passenger side when the seat is occupied and the seat belt is fastened
- independently of the front air bags

When activated, Emergency Tensioning Devices remove slack from the seat belts in such a way that the seat belts fit more snugly against the body. Seat belt force limiters, when activated, reduce the force exerted by the seat belts on occupants during a crash.

When the emergency tensioning device is triggered, the SRS indicator lamp in the instrument cluster illuminates, see "SRS indicator lamp" (▷ page 169).

⚠ WARNING

Once they have been triggered, Emergency Tensioning Devices will no longer function properly and must be replaced. smart recommends that you visit a qualified workshop to have this done. In particular, work relevant to safety or on safety-related systems must be carried out at a qualified specialist workshop.

Comply with safety regulations when disposing of Emergency Tensioning Devices. These regulations are available at any smart center.

The belt force limiter is designed to operate in unison with the front air bag, which absorbs a portion of the seat belt's decelerating forces, distributing the load over a larger area.

In the event of a head-on or rear-end collision, the emergency tensioning device is activated if the vehicle is decelerated or accelerated sufficiently in the longitudinal direction at the start of impact with the ignition switched on.

Air bags

Air bags can reduce the severity of injuries in serious collisions, e.g. in a head-on collision or a side impact.

⚠ WARNING

Air bags are designed to reduce the potential of injury in certain frontal impacts (front air bags and knee bags), or side impacts (head-thorax air bags, window curtain air bags and thorax-pelvis air bags) which may cause significant injuries. However, no system available today can completely eliminate injuries and fatalities.

The deployment of the air bags temporarily releases a small amount of dust from the air bags. This dust is neither injurious to your health, nor does it indicate a fire in the vehicle. The dust might cause some temporary breathing difficulty for people with asthma or other breathing trouble. To avoid this, you may wish to get out of the vehicle as soon as it is safe to do so. If you have any breathing difficulty but cannot get out of the vehicle after the air bag inflates, then get fresh air by opening a window or door.

WARNING

To reduce the risk of injury when the front air bags inflate, it is very important for the driver and passenger to always be in a properly seated position and to wear their respective seat belt.

For maximum protection in the event of a collision always be in normal seated position with your back against the backrest. Fasten your seat belt and ensure it is properly positioned on your body.

Since the air bag inflates with considerable speed and force, a proper seating and hands on steering wheel position will help to keep you at a safe distance from the air bag.

Occupants who are unbelted, out of position or too close to the air bag can be seriously injured or killed by an air bag as it inflates extremely quickly and with great force:

- Sit properly belted in a position that is as upright as possible with your back against the seat backrest.
- Adjust the driver's seat as far as possible rearward, still permitting proper operation of vehicle controls. The distance from the center of the driver's breastbone to the center of the air bag cover on the steering wheel must be at least 10 inches (25 cm) or more. You should be able to accomplish this by adjustments to the seat. If you have any problems, please contact an authorized electric drive smart center.
- Do not lean your head or chest close to the steering wheel or dashboard.
- Keep hands on the outside of the steering wheel rim. Placing hands and arms inside the rim can increase the risk and potential severity of hand/arm injury when the driver's front air bag inflates.
- Adjust the passenger seat as far as possible rearward from the dashboard when the seat is occupied.
- Occupants, especially children, should never place their bodies or lean their heads in the area of the door where the head-thorax air bag (cabriolet) or thorax-pelvis side air bag (coupé) inflates. This could result in serious injuries or death should the head-thorax air bag (cabriolet) or thorax-pelvis side air bag (coupé) be deployed. Always sit as upright as possible, wear the seat belt properly and use an appropriately sized infant restraint, toddler restraint, or booster seat recommended for the size and weight of the child.

Failure to follow these instructions can result in severe injuries to you or other occupants.

If you sell your vehicle, it is important that you make the buyer aware of this safety information. Be sure to give the buyer this Operator's Manual.

Air bags are designed to deploy only in certain frontal impacts (front air bags and knee bags), or side impacts (head-thorax air bags, window curtain air bags and thorax-pelvis air bags) which exceed preset thresholds. Only during these events will they provide their supplemental protection.

The driver and passenger should always wear their seat belts. Otherwise it is not possible for air bags to provide their supplemental protection.

In case of other types of impacts and impacts below air bag deployment thresholds, air bags will not deploy. The driver and passenger will then be protected to the extent possible by a properly fastened seat belt. A properly fastened seat belt is also needed to provide the best possible protection in a rollover.

We caution you not to rely on the presence of the air bags in order to avoid wearing your seat belt.

It is important to your safety and that of your passenger that you replace deployed air bags and repair any malfunctioning air bags to make sure the vehicle will continue to provide supplemental crash protection for occupants.

Safety guidelines for the seat belt, Emergency Tensioning Devices (ETDs) and air bag

WARNING

- Damaged seat belts or seat belts that have been highly stressed in an accident must be replaced and their anchoring points must also be checked. Only use seat belts installed or supplied by an authorized electric drive smart center.
- Air bags and Emergency Tensioning Devices (ETDs) contain Perchlorate material, which may require special handling and regard for the environment. Check with your local government's disposal guidelines. California residents, see **http://www.dtsc.ca.gov/HazardousWaste/Perchlorate/index.cfm** .
- Given the considerable deployment speed, required inflation volume, and the textile structure of the air bags, there is the possibility of abrasions or other, potentially more serious injuries resulting from air bag deployment.
- Air bags and Emergency Tensioning Devices (ETDs) are designed to function on a one-time-only basis. An air bag or ETD that has deployed must be replaced.
- Do not pass seat belts over sharp edges. They could tear.
- Do not make any modification that could change the effectiveness of the seat belts.
- No modifications of any kind may be made to any components or wiring of the SRS. This includes changing or removing any component or part of the SRS, the installation of additional trim material, badges, etc. over the steering wheel hub, passenger front air bag cover, outboard sides of the seat backrests, and installation of additional electrical/electronic equipment on or near SRS components and wiring. Keep area between air bags and occupants free from objects (e.g. packages, purses, umbrellas, etc.).
- Do not bleach or dye seat belts as this may severely weaken them. In a crash they may not be able to provide adequate protection.
- Do not hang hangers on the coat hooks or handles over the door. These items may turn into projectiles and cause head and other injuries when the head-thorax air bag is deployed.
- Air bag system components will be hot after an air bag has inflated. Do not touch them.
- Never place your feet on the instrument panel, dashboard, or on the seat. Always keep both feet on the floor in front of the seat.
- In addition, improper repair work on the SRS creates a risk of rendering the SRS inoperative or causing unintended air bag deployment. Work on the SRS must therefore only be performed by qualified technicians. Contact an authorized electric drive smart center.
- For your protection and the protection of others, when scrapping the air bag unit or Emergency Tensioning Devices (ETDs), our safety instructions must be followed. These instructions are available from any authorized electric drive smart center.

How an air bag operates

An air bag is inflated in a matter of milliseconds. If an air bag is triggered, the

SRS indicator lamp in the instrument cluster illuminates.

! If the air bags are activated, you will hear a loud noise and some dust may be generated. The explosion fundamentally represents no risk to your hearing.

An inflated air bag slows down and reduces the movement of the occupant. When the occupant makes contact with a front air bag or head-thorax air bag (cabriolet only), hot gas flows out of the inflated front air bags and head-thorax air bags (cabriolet only). This reduces the load on the occupant's head and upper body. These air bags are consequently deflated after the accident.

Driver front air bag/passenger front air bag

The front air bags are designed to reduce the potential of injury in certain frontal impacts.

Driver front air bag and passenger front air bag are deployed

- at the start of an accident with high vehicle deceleration in the longitudinal direction
- independently of other air bags in the vehicle being deployed
- never in the event of a rollover, unless high vehicle deceleration in the longitudinal direction is detected

i The front air bags in this vehicle have been designed to inflate in two stages. This allows the air bag to have different rates of inflation that are based on the rate of relevant vehicle deceleration and a fastened or unfastened seat belt as assessed by the air bag control unit.

On the passenger side, the front air bag deployment is additionally influenced by the passenger's weight category as identified by the Occupant Classification System (OCS) (▷ page 39).

The lighter the passenger side occupant, the higher the vehicle deceleration rate required for the second stage inflation of the air bag.

The air bags will not deploy in impacts which do not exceed the system's deployment thresholds. In such instances, the seat belts are designed to protect you.

The passenger air bag will only be deployed if

- the system, based on OCS weight sensor readings, senses that the passenger seat is occupied and the PASS AIR BAG OFF indicator lamp is not lit (▷ page 41)
- the impact exceeds a preset deployment threshold

The driver front air bag is located in the steering wheel housing, the passenger front air bag above the glove box.

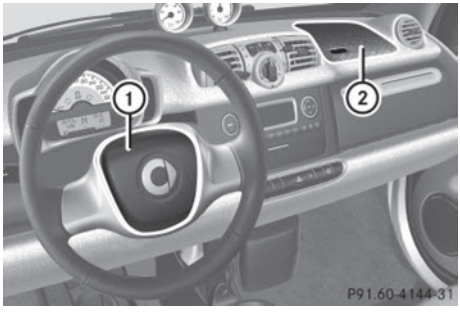

① Driver front air bag

② Passenger front air bag

Knee bags

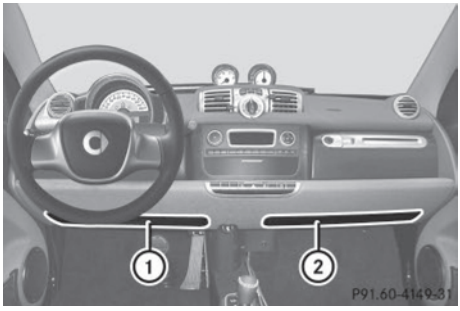

① Driver's knee bag

② Passenger knee bag

The knee bags are designed to provide increased protection for the driver and passenger against the risk of injuries to the knees, thighs and lower legs. The knee bags are located on the lower instrument panel. They are designed to operate together with the front air bags in certain frontal impacts if the system determines that air bag deployment can offer additional protection to that provided by the seat belts. Knee bags operate best in conjunction with a properly positioned and fastened seat belts.

Head-thorax air bags (cabriolet only)

⚠ WARNING

There is a possibility for a head-thorax air bag related injury if occupants, especially children, are not properly seated or restrained when next to a head-thorax air bag which needs to deploy rapidly in a side impact in order to do its job.

To help avoid the possibility of injury, please follow these guidelines:

(1) Occupants, especially children, should never place their bodies or lean their heads in the area of the door where the head-thorax air bag inflates. This could result in serious injuries or death should the head-thorax air bag be deployed.

(2) Always sit as upright as possible, properly use the seat belts, and for all children 12 years old or under, use an appropriately sized infant restraint, toddler restraint, or booster seat recommended for the size and weight of the child.

(3) Always wear seat belts properly.

⚠ WARNING

Only use seat covers which have been tested and approved by smart for your vehicle model. A seat cover must have a deployment control seam for the head-thorax air bag. Using other seat covers may interfere with or prevent the deployment of the head-thorax air bags. Contact an authorized electric drive smart center for availability.

If activated, the head-thorax air bags are intended to provide increased protection for the head and thorax (but not arms) of the occupants on the side of the vehicle that is struck.

The head-thorax air bags are deployed

- on the side of the vehicle that is struck (when passenger side is struck only if the seat is occupied)
- at the start of an accident with high vehicle deceleration or acceleration acting in a lateral direction, e.g. a side impact
- regardless of whether or not the seat belt is in use
- independently of the front air bags being deployed
- independently of the emergency tensioning device

The head-thorax air bags are integrated into the driver and passenger seat backrests.

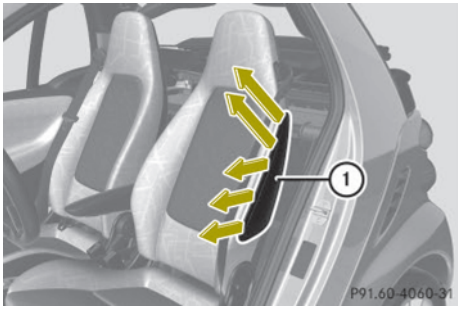

① Head-thorax air bag

Window curtain air bags and thorax-pelvis side air bags (coupé only)

⚠ WARNING

There is a possibility for a thorax-pelvis side air bag related injury if occupants, especially children, are not properly seated or restrained when next to a thorax-pelvis side air bag which needs to deploy rapidly in a side impact in order to do its job.

To help avoid the possibility of injury, please follow these guidelines:

(1) Occupants, especially children, should never place their bodies or lean their heads in the area of the door where the thorax-pelvis side air bag inflates. This could result in serious injuries or death should the thorax-pelvis side air bag be deployed.

(2) Always sit as upright as possible, properly use the seat belts, and for all children 12 years old or under, use an appropriately sized infant restraint, toddler restraint, or booster seat recommended for the size and weight of the child.

(3) Always wear seat belts properly.

⚠ WARNING

Only use seat covers which have been tested and approved by smart for your vehicle model. A seat cover must have a deployment control seam for the thorax-pelvis side air bag. Using other seat covers may interfere with or prevent the deployment of the thorax-pelvis side air bags. Contact an authorized electric drive smart center for availability.

Window curtain air bags

Window curtain air bags are designed to provide increased protection for the head, but not the chest or arms.

Window curtain air bags are deployed

- on the impacted side of the vehicle
- in instances with a high rate of lateral vehicle deceleration or acceleration
- independently of the front air bags
- regardless of whether the passenger seat is occupied
- in a rollover if the system determines that air bag deployment can offer additional protection to that provided by the seat belt.

The window curtain air bags are integrated into the inner side of the roof frame. They run above the doors from the A-pillar to the B-pillar.

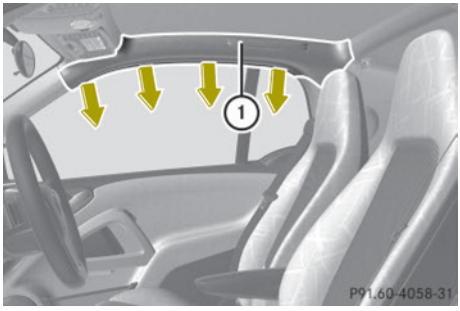

① Window curtain air bags

Thorax-pelvis side air bags

Thorax-pelvis side air bags are designed to provide increased protection for the thorax and pelvis, but not the arms.

Thorax-pelvis side air bags are deployed

- on the impacted side of the vehicle
- in instances with a high rate of lateral vehicle deceleration or acceleration
- independently of the front air bags
- regardless of whether the seat belt on the impacted side of the vehicle is in use
- independently of the ETDs.

Thorax-pelvis side air bags will generally not deploy in a rollover.

The thorax-pelvis side air bags will deploy, however, if the system detects

- a high rate of lateral vehicle deceleration or acceleration, and
- that air bag deployment can offer additional protection to that provided by the seat belt.

The thorax-pelvis side air bags are integrated into the driver and passenger seat backrests.

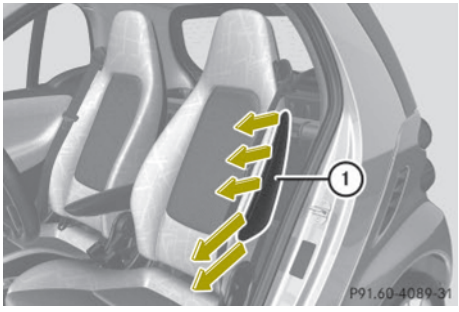

① Thorax-pelvis side air bags

Occupant Classification System

The **O**ccupant **C**lassification **S**ystem (OCS) automatically turns the passenger front air bag on or off based on the classified occupant weight category determined by weight sensor readings from the passenger seat.

Based on the classified occupant weight category determined by weight sensor readings from the passenger seat, the system does also deactivate

- head-thorax air bag (cabriolet)
- the window curtain air bag (coupé)
- the thorax-pelvis side air bag (coupé)
- the seat Emergency Tensioning Devices
- the seat belt force limiter.

Occupants must sit properly belted in a position that is as upright as possible with their back against the seat backrest and feet on the floor to be correctly classified. If the occupant's weight is transferred to another object in the vehicle (e.g. by leaning on armrests), the OCS may not be able to properly approximate the occupant's weight category.

If the seat, including the trim cover and cushion, needs to be serviced in any way, take the vehicle to an authorized electric drive smart center. Only seat accessories approved by smart may be used.

Both driver and the passenger should always use the PASS AIR BAG OFF indicator lamp as an indication of whether or not the passenger is properly positioned (▷ page 41).

WARNING

If the PASS AIR BAG OFF indicator lamp illuminates when an adult or someone larger than a small individual is in the passenger seat, have the passenger re-position himself or herself in the seat until the PASS AIR BAG OFF indicator lamp goes out.

In the event of a collision, the air bag control unit will not allow passenger front air bag deployment when the OCS has classified the passenger seat occupant as being up to or less than the weight of a typical 12-month-old child in a standard child restraint, or if the passenger seat is sensed as being empty.

When the OCS senses that the passenger seat occupant is classified as being up to or less than the weight of a typical 12-month-old child in a standard child restraint, the PASS AIR BAG OFF indicator lamp will illuminate when the ignition is switched on and remain illuminated, indicating that the passenger front air bag is deactivated.

When the OCS senses that the passenger seat is classified as being empty, the PASS AIR BAG OFF indicator lamp will illuminate and remains illuminated.

When the OCS senses that the passenger seat occupant is classified as being heavier than the weight of a typical 12-month-old child seated in a standard child restraint or as being a small individual (such as a young teenager or a small adult), the PASS AIR BAG OFF indicator lamp will illuminate for approximately 4 seconds when the ignition is switched on and then, depending on occupant weight sensor readings from the seat, remains illuminated or goes out.

When the PASS AIR BAG OFF indicator lamp is illuminated, the passenger front air bag is deactivated.

When the PASS AIR BAG OFF indicator lamp is out and the passenger seat is occupied by an adult or someone larger than a small individual, the passenger front air bag is activated.

When the OCS senses that the passenger seat occupant is classified as an adult or someone larger than a small individual, the PASS AIR BAG OFF indicator lamp will illuminate for approximately 4 seconds when the ignition is switched on and then goes out, indicating that the passenger front air bag is activated.

If the PASS AIR BAG OFF indicator lamp is illuminated, the passenger front air bag is deactivated and will not be deployed.

If the PASS AIR BAG OFF indicator lamp is not illuminated, the passenger front air bag is activated and will be deployed

- in the event of certain frontal impacts
- if impact exceeds a preset deployment threshold
- independently of the head-thorax air bags

If the passenger front air bag is deployed, the rate of inflation will be influenced by

- the rate of vehicle deceleration and a fastened or unfastened seat belt as assessed by the air bag control unit
- the passenger's weight category as identified by the OCS

⚠ WARNING

Children 12 years old and under must be seated and properly secured in an appropriate infant or child restraint recommended for the size and weight of the child.

The infant or child restraint must be properly secured with the vehicle's seat belt, fully in accordance with the child seat manufacturer's instructions.

Children can be killed or seriously injured by an inflating air bag. Note the following important information:

- Your vehicle is equipped with air bag technology designed to turn off the passenger front air bag in your vehicle when the system senses the weight of a typical 12-month-old child or less along with the weight of a standard appropriate child restraint on the passenger seat.
- A child in a rear-facing child restraint on the passenger seat will be seriously injured or even killed if the passenger front air bag inflates in a collision which could occur under some circumstances, even with the air bag technology installed in your vehicle.
- If you install a rear-facing child restraint on the passenger seat, make

sure the PASS AIR BAG OFF indicator lamp is illuminated, indicating that the passenger front air bag is deactivated. Should the PASS AIR BAG OFF indicator lamp not illuminate or go out while the restraint is installed, please check installation.

Periodically check the PASS AIR BAG OFF indicator lamp while driving to make sure the PASS AIR BAG OFF indicator lamp is illuminated.

If the PASS AIR BAG OFF indicator lamp goes out or remains out, do not transport a child on the passenger seat until the system has been repaired.

A child in a rear-facing child restraint on the passenger seat may be seriously injured or even killed if the passenger front air bag inflates.

- If you place a child in a forward-facing child restraint on the passenger seat, move the seat as far back as possible, use the proper child restraint recommended for the age, size and weight of the child by the seat manufacturer, and secure child restraint with the vehicle's seat belt according to the child seat manufacturer's instructions. For children larger than the typical 12-month-old child, the passenger front air bag may or may not be activated.

Deployment of the driver front air bag does not mean that the passenger front air bag also should have deployed.

The Occupant Classification System may have determined

- that the seat was empty or occupied by the weight up to or less than that of a typical 12-month-old child seated in a standard child restraint — both instances where the system suppresses deployment of the passenger front air bag even though the impact met the criteria and was of sufficient severity to deploy the driver front air bag
- that the seat was occupied by a small individual (such as a young teenager or a small adult) or a child weighing more than the weight of a typical 12-month-old child in a standard child restraint — instances where the system may suppress deployment of the passenger front air bag even though the impact met the criteria and was of sufficient severity to deploy the driver front air bag

Passenger front air bag off indicator lamp

The indicator lamp is located on the overhead control panel.

Passenger front air bag off indicator lamp ① illuminates when the passenger front air bag is deactivated.

WARNING

When the SRS indicator lamp and the PASS AIR BAG OFF indicator lamp are lit at the same time, there is a malfunction in the Occupant Classification System.

In order to ensure proper operation of the air bag system and OCS:

- Have the system checked as soon as possible by qualified technicians. Contact an authorized electric drive smart center.
- Sit properly belted in a position that is as upright as possible with your back against the seat backrest.

▷▷

- Do not lean on the armrests or lift yourself from the seat by using the handle over the door as this may cause the OCS to be unable to correctly approximate the occupant weight category.
- Only have the seat repaired or replaced by an authorized electric drive smart center.
- Read and observe all warnings in this chapter.

Self-test Occupant Classification System

After turning the key in the starter switch to position **1** or **2**, the indicator lamp located in the center console illuminates. If an adult occupant is properly sitting on the passenger seat and the system senses the occupant as being an adult, the indicator lamp will illuminate and go out after approximately 4 seconds.

If the seat is not occupied and the system senses the passenger seat as being empty, the indicator lamp will illuminate and not go out.

WARNING

If the indicator lamp does not illuminate immediately after switching on the drive system, the system is not functioning. You must contact an authorized electric drive smart center before seating any child on the passenger seat.

More information can be found in the "Practical hints" section (▷ page 175).

WARNING

Never place anything between seat cushion and child seat (e.g. pillow), since it reduces the effectiveness of the Occupant Classification System. The bottom of the child seat must make full contact with the passenger seat cushion. An incorrectly mounted child seat could cause injuries to the child in case of an accident, instead of increasing protection for the child.

Follow the manufacturer's instructions for installation of child seats.

Children in the vehicle

If an infant or child is traveling with you in the vehicle:

- ▶ Secure the child using an infant or child restraint appropriate to the age and size of the child.
- ▶ Make sure the infant or child is properly secured at all times while the vehicle is in motion.

WARNING

Do not leave children unattended in the vehicle, even if they are secured in a child restraint system. The children could

- injure themselves on parts of the vehicle
- be seriously or fatally injured through excessive exposure to extreme heat or cold

Do not expose the child restraint system to direct sunlight. The child restraint system's metal parts, for example, could become very hot, and the child could be burned on these parts.

If children open a door, they could

- injure other persons
- get out of the vehicle and injure themselves or be injured by following traffic

Do not carry heavy or hard objects in the passenger compartment unless they are firmly secured in place.

For more information, please refer to the "Loading and storing section".

Unsecured or improperly positioned cargo increases a child's risk of injury in the event of

- strong braking maneuvers
- sudden changes of direction
- an accident

Infant and child restraint system

We recommend all infants and children be properly restrained at all times while the vehicle is in operation.

The passenger lap-shoulder belt has a special seat belt retractor for secure fastening of child restraints.

To fasten a child restraint, follow all mounting instructions provided by the child restraint manufacturer. Then pull the shoulder seat belt out completely and let it retract. During seat belt retraction, a ratcheting sound can be heard to indicate that the special seat belt retractor is activated. The seat belt is now locked. Push down on child restraint to take up any slack.

To deactivate, release seat belt buckle and let seat belt retract completely. To deactivate the special seat belt retractor for the passenger seat, the passenger seat must be in the most backward position. The seat belt can again be used in the usual manner.

⚠ WARNING

Never release the seat belt buckle while the vehicle is in motion, since the special seat belt retractor will be deactivated.

The use of infant or child restraints is required by law in all 50 states, the District of Columbia, the U.S. territories, and all Canadian provinces and territories.

Infants and small children should be seated in an appropriate infant or child restraint system properly secured in accordance with the manufacturer's instructions for the child restraint, that complies with U.S. Federal Motor Vehicle Safety Standards 213 and 225 and Canadian Motor Vehicle Safety Standards 213, 213.1 and 213.2.

A statement by the child restraint manufacturer of compliance with these standards can be found on the instruction label on the restraint and in the instruction manual provided with the restraint.

When using any infant restraint, toddler restraint, or booster seat be sure to carefully read and follow all manufacturer's instructions for installation and use.

Please read and observe warning labels affixed to the inside of the vehicle and to infant or child restraints.

⚠ WARNING

Children 12 years old and under must be seated and properly secured in an appropriately sized infant restraint, toddler restraint, or booster seat recommended for the size and weight of the child.

The infant or child restraint must be properly secured with the vehicle's seat belt fully in accordance with the child seat manufacturer's instructions.

Occupants, especially children, should never place their bodies or lean their heads in the area of the door where the head-thorax air bags (cabriolet), window curtain air bags (coupé) and thorax-pelvis air bags (coupé) inflates. This could result in serious injuries or death should the head-thorax air bags (cabriolet), window curtain air bags (coupé) and thorax-pelvis air bags (coupé) be triggered. Always sit as upright as possible, properly use the seat belt and use an appropriately sized infant restraint, toddler restraint, or booster seat recommended for the size and weight of the child.

Children can be killed or seriously injured by an inflating air bag. Note the following important information when circumstances require you to place a child in the passenger seat:

- Your vehicle is equipped with air bag technology designed to turn off the passenger front air bag in your vehicle when the Occupant Classification System senses the weight of a typical 12-month-old child or less along with the weight of an appropriate child restraint on the passenger seat.
- A child in a rear-facing child restraint on the passenger seat may be seriously injured or even killed if the passenger front air bag inflates in a collision.
- If you install a rear-facing child restraint on the passenger seat, make sure the PASS AIR BAG OFF indicator lamp is illuminated, indicating that the passenger front air bag is deactivated. Should the PASS AIR BAG OFF indicator lamp not illuminate or go out while the restraint is installed, please check installation. Periodically check the PASS AIR BAG OFF indicator lamp while driving to make sure the PASS AIR BAG OFF indicator lamp is illuminated. If the PASS AIR BAG OFF indicator lamp goes out or remains out, do not transport a child on the passenger seat until the system has been repaired. A child in a rear-facing child restraint on the passenger seat may be seriously injured or even killed if the passenger front air bag inflates.
- If you place a child in a forward-facing child restraint on the passenger seat, move the seat as far back as possible, use a proper child restraint recommended for the age, size and weight of the child, and secure child restraint with the vehicle's seat belt according to the child seat manufacturer's instructions. For children larger than the typical 12-month-old child, the passenger front air bag may or may not be activated.

⚠ WARNING

Infants and small children should never share a seat belt with another occupant. During an accident, they could be crushed between the occupant and seat belt.

A child's risk of serious or fatal injuries is significantly increased if the child restraints are not properly secured in the vehicle and/or the child is not properly secured in the child restraint.

Children too big for a toddler restraint must ride in a seat using regular seat belt.

Position shoulder belt across chest and shoulder, not face or neck. A booster seat may be necessary to achieve proper seat belt positioning for children over 41 lbs until they reach a height where a lap-shoulder belt fits properly without a booster.

When the child restraint is not in use, remove it from the vehicle or secure it with the seat belt to prevent the child restraint from becoming a projectile in the event of an accident.

Do not leave children unattended in the vehicle, even if the children are secured in a child restraint system. Unsupervised children in a child restraint system may use vehicle equipment and may cause an accident and/or serious personal injury.

If you are using a rear-facing child restraint system on the passenger seat, you must verify that the passenger front air bag is deactivated. When the passenger front air bag is deactivated, the PASS AIR BAG OFF indicator lamp is illuminated (▷ page 41).

Top tether

Top tether permits an additional connection between a child restraint system and the passenger seat. Proper usage of the top tether, in accordance with instructions provided by the child restraint manufacturer, can further reduce the risk of injuries.

The top tether anchorage is located on the floor of the cargo compartment. The top tether guide for the top tether strap is located above, on the head restraint.

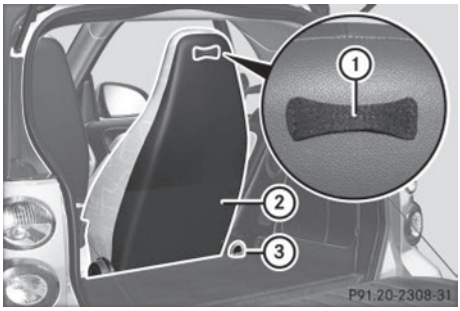

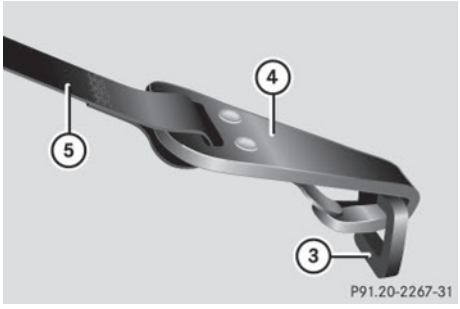

- Thread top tether strap (5) through top tether guide (1) down the back of passenger seat (2) to top tether anchorage (3).
- Attach top tether hook (4) to top tether anchorage (3) on the floor of the cargo compartment.

If you are using divider plus*, the hooks of the top tether and the divider plus* are attached to the same anchorage.

- Install the child restraint system and tighten top tether strap (5) according to the child restraint manufacturer's instructions.

WARNING

After installing top tether straps, make sure the seat backrests are in an upright position and are properly locked. Push and pull on the seat backrests to ensure they are properly secured in the locked position. If a seat backrest is not properly locked, the seat backrest could fold. The child seat would no longer be properly supported or positioned to provide its intended benefit. That could cause serious or even fatal injuries.

Panic alarm

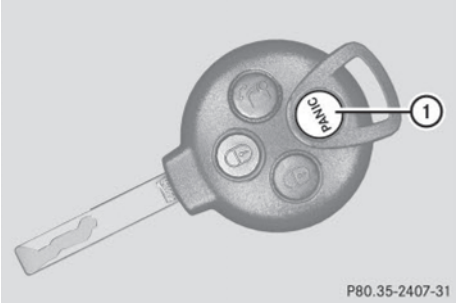

- **Activating:** Press and hold button (1) for at least 1 second.
  An audible alarm and flashing exterior lamps will operate briefly.
- **Deactivating:** Press button (1) once more.

or

- Insert the key in the starter switch.

USA only:

This device complies with Part 15 of the FCC Rules. Operation is subject to the following two conditions:

1. This device may not cause harmful interference, and

2. this device must accept any interference received, including interference that may cause undesired operation.

Any unauthorized modification to this device could void the user's authority to operate the equipment.

The product label with FCC ID and IC certification number can be found in the battery case.

* optional

Canada only:

This device complies with RSS-210 of Industry Canada. Operation is subject to the following two conditions:

1. This device may not cause interference, and

2. this device must accept any interference received, including interference that may cause undesired operation of the device.

Any unauthorized modification to this device could void the user's authority to operate the equipment.

The product label with FCC ID and IC certification number can be found in the battery case.

Driving safety systems

Introduction

WARNING

The following factors increase the risk of accidents:

- Excessive speed, especially in turns
- Wet and slippery road surfaces
- Following another vehicle too closely

The driving safety systems described in this section cannot reduce these risks or prevent the natural laws of physics from acting on the vehicle.

Always adapt your driving style to the prevailing road and weather and traffic conditions and keep a safe distance to other road users and objects on the street.

In winter operation, the maximum effectiveness of the ABS, the hydraulic brake assistant, and the ESP® is only achieved with winter tires (▷ page 146) or snow chains* as required.

Antilock Brake System (ABS)

WARNING

Do not pump the brake pedal. Use firm, steady brake pedal pressure instead. Pumping the brake pedal defeats the purpose of the ABS and significantly reduces braking effectiveness.

The **A**ntilock **B**rake **S**ystem (ABS) regulates the brake pressure so that the wheels do not lock during braking. This allows you to maintain the ability to steer your vehicle.

On slippery road surfaces, the ABS will respond even to light brake pressure.

The ABS indicator lamp in the instrument cluster (▷ page 24) comes on when you switch on the ignition. It goes out when the drive system is active.

Braking

At the instant one of the wheels is about to lock up, a slight pulsation can be felt in the brake pedal, indicating that the ABS is regulating the brake pressure.

▶ Keep firm and steady pressure on the brake pedal while experiencing the pulsation.

Continuous, steady brake pedal pressure yields the advantages provided by the ABS, namely braking power and the ability to steer the vehicle.

A pulsating brake pedal can be an indication of hazardous road conditions and functions as a reminder to take extra care while driving.

Emergency brake maneuver

▶ Keep continuous full pressure on the brake pedal.

WARNING

When the ABS is malfunctioning, the hydraulic brake assistant and the ESP® are also switched off.

When the ABS is malfunctioning, the wheels may lock during hard braking, reducing steering capability and extending the braking distance.

⚠ WARNING

The ABS cannot prevent the natural laws of physics from acting on the vehicle, nor can it increase braking or steering efficiency beyond that afforded by the condition of the vehicle brakes and tires or the traction afforded. The ABS cannot prevent accidents, including those resulting from excessive speed in turns, following another vehicle too closely, or hydroplaning. Only a safe, attentive, and skillful driver can prevent accidents. The capabilities of an ABS equipped vehicle must never be exploited in a reckless or dangerous manner which could jeopardize the user's safety or the safety of others.

Electronic Stability Program (ESP®)

Your vehicle is equipped with the **E**lectronic **S**tability **P**rogram (ESP®). The ESP® is operational as soon as the drive system is switched on and it monitors the vehicle's traction (force of adhesive friction between the tires and the road surface) and handling.

The ESP® recognizes when a wheel is spinning or if the vehicle starts to skid. By applying brakes to the appropriate wheel and by limiting the power output, the ESP® works to stabilize the vehicle. The ESP® is especially useful while driving off and on wet or slippery road surfaces. The ESP® also stabilizes the vehicle during braking and steering maneuvers.

The ESP® warning lamp in the instrument cluster flashes when the ESP® is engaged.

The ESP® warning lamp in the instrument cluster comes on when you switch on the ignition. It goes out when the drive system is active.

Depending on the driving situation, the ESP®

- reduces the speed
- selectively brakes individual wheels
- equalizes the speed of the driven wheels
- stabilizes the vehicle when braking
- assists you in evasive maneuvers on all roads

⚠ WARNING

If the ESP® warning lamp in the instrument cluster flashes, proceed as follows:

- While driving off, apply as little throttle as possible.
- While driving, ease up on the accelerator pedal.
- Adapt your speed and driving style to the prevailing road conditions.

Failure to observe these guidelines could cause the vehicle to skid.

The ESP® cannot prevent accidents resulting from excessive speed.

⚠ WARNING

The ESP® cannot prevent the natural laws of physics from acting on the vehicle, nor can it increase the traction afforded. The ESP® cannot prevent accidents, including those resulting from excessive speed in turns, or hydroplaning. Only a safe, attentive, and skillful driver can prevent accidents. The capabilities of an ESP® equipped vehicle must never be exploited in a reckless or dangerous manner which could jeopardize the user's safety or the safety of others.

! Because the ESP® operates automatically, the ignition must be switched off when the parking brake is being tested on a brake test dynamometer. Active braking action through the ESP® may oth-

erwise seriously damage the brake system which is not covered by the smart Limited Warranty.

ⓘ The ESP® will only function properly if you use wheels of the recommended tire size (▷ page 216).

Hydraulic brake assistant

The hydraulic brake assistant operates in emergency situations. If you apply the brakes very quickly, the hydraulic brake assistant automatically provides full brake boost, thereby potentially reducing the braking distance.

▶ Apply continuous full braking pressure until the emergency braking situation is over.
The ABS will prevent the wheels from locking.

When you release the brake pedal, the brakes function again as normal. The hydraulic brake assistant is then deactivated.

⚠ **WARNING**

When the hydraulic brake assistant is malfunctioning, the brake system is still functioning normally, but without the additional brake boost that would normally be provided during an emergency braking maneuver. Therefore, the braking distance may increase.

⚠ **WARNING**

The hydraulic brake assistant cannot prevent the natural laws of physics from acting on the vehicle, nor can it increase braking efficiency beyond that afforded by the condition of the vehicle brakes and tires or the traction afforded. The hydraulic brake assistant cannot prevent accidents, including those resulting from excessive speed in turns, following another vehicle too closely, or hydroplaning. Only a safe, attentive, and skillful driver can prevent accidents. The capabilities of a hydraulic brake assistant equipped vehicle must never be exploited in a reckless or dangerous manner which could jeopardize the user's safety or the safety of others.

Activating the hazard warning flasher after an emergency braking maneuver

If you bring the vehicle to a complete stop by strongly braking at a speed of more than 43 mph (70 km/h), the hazard warning flasher comes on automatically as soon as the vehicle is at a standstill. The hazard warning flasher will remain on until it is switched off using the hazard warning flasher switch (▷ page 68) or until the speed of the vehicle has exceeded 6 mph (10 km/h).

Acoustic Vehicle Indication*

Vehicles with electric motors develop considerably lower driving noises than vehicles with combustion engines. Therefore your vehicle in traffic might not be acoustically noticed by other road users in certain situations.

In order to avoid this, a built-in sound generator emits a certain noise (Acoustic Vehicle Indication) within a speed range between 0 to 20 mph (30 km/h). Thus, other road users, especially pedestrians and bicycle riders can notice your vehicle better. Acoustic Vehicle Indication can also be heard inside of the vehicle.

The volume of Acoustic Vehicle Indication depends on the current engine speed (rpm). The stronger you accelerate, the louder the noise. At speed of more than 20 mph 30 km/h the noise is switched off. From this speed on the natural noises of the vehicle are sufficient so that other road users can notice the vehicle on time.

* optional

Anti-theft systems

Electronic immobilizer

The electronic immobilizer prevents unauthorized persons from starting your vehicle.

When leaving the vehicle, always take the key with you and lock the vehicle. The drive system can be switched on by anyone with a key that is left inside the vehicle.

- **Activating:** Remove the key from the starter switch.
- **Deactivating:** Insert the key in the starter switch.
- Turn the key to starter switch position **1**.

Anti-theft warning system*

Once the anti-theft warning system has been armed, a visual and audible alarm is triggered when

- someone opens a door or the tailgate
- someone enters the vehicle's interior
- there is motion inside the vehicle
- someone attempts to raise the vehicle

The alarm will also be triggered when unlocking and opening the driver's door with the key.

The alarm will stay on, even if the driver's door is immediately closed. For canceling the alarm, see (▷ page 49).

Close the windows and the tailgate before arming the alarm system. Make sure there are no moving objects inside the vehicle.

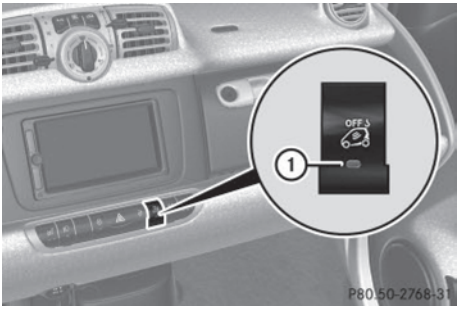

- **Arming:** Lock the vehicle using the remote control.
  Warning system indicator lamp ① flashes rapidly. The anti-theft warning system arms after about 25 seconds. When the anti-theft warning system is armed, warning system indicator lamp ① flashes about every three seconds.

You can also arm the anti-theft warning system by locking the vehicle without using the remote control (▷ page 177).

- **Disarming:** Unlock the vehicle using the remote control.
  The anti-theft warning system is disarmed. Warning system indicator lamp ① stops flashing.

Canceling the alarm

- Insert the key in the starter switch.
- Turn the key to starter switch position **1**.

or

- Press button ⓐ or ⓑ on the key.

Tow-away alarm* and interior motion sensor*

Once the anti-theft warning system has been armed, a visual and audible alarm is triggered when someone attempts to raise the vehicle or if motion is detected inside the vehicle.

* optional

- ▶ **Arming:** Lock the vehicle using the remote control.
  The tow-away protection and the interior motion sensor are armed after about 25 seconds.
- ▶ **Disarming:** Unlock the vehicle using the remote control.
  The tow-away protection and the interior motion sensor are disarmed.

Canceling the alarm

- ▶ Insert the key in the starter switch.
- ▶ Turn the key to starter switch position **1**.

or

- ▶ Press button ⓐ or ⓑ on the key.

Switching off tow-away protection and interior motion sensor

Switch off the tow-away protection and the interior motion sensor when locking the vehicle and

- transporting the vehicle,
- board, e.g. a ferry or auto train,
- there are people or animals in the vehicle,
- the side windows remain open.

This prevents any false alarm.

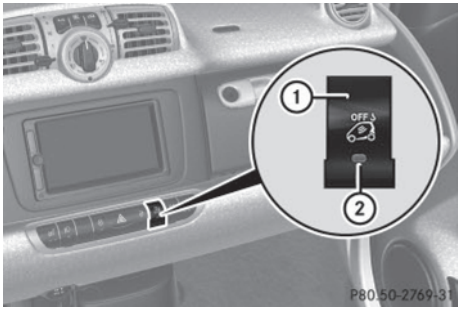

- ▶ Remove the key from the starter switch.
- ▶ Press switch ① within 60 seconds.
  Indicator lamp ② comes on.
- ▶ Exit the vehicle.
- ▶ Lock the vehicle using the remote control.

ⓘ The tow-away protection and the interior motion sensor remain switched off until you lock your vehicle again.

Opening and closing 52
Starter switch positions 57
Seats 58
Mirrors 61
Seat belts 62
Lighting 64
Windshield wipers 69
Soft top system (cabriolet only) 70
Side windows 75
Driving and parking 76
Transmission 79
Instrument cluster 81
Control system 83
Audio system* 95
Driving systems 97
Air conditioning with climate control 99
Loading and storing 104
Useful features 109

Opening and closing

Key

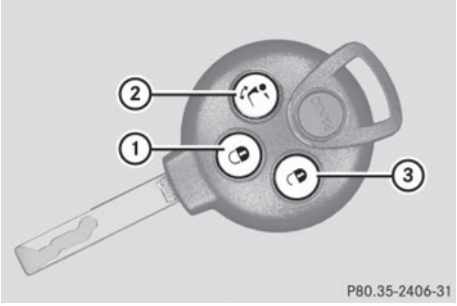

Key with remote control

① Lock button

② Opening the retractable soft top[3]/ unlocking the upper tailgate[4]

③ Unlock button

The remote control centrally locks and unlocks:

- the driver's door
- the charge socket flap
- the passenger door
- the upper tailgate

WARNING

When leaving the vehicle, always remove the key from the starter switch, take it with you, and lock the vehicle. Do not leave children unattended in the vehicle, or with access to an unlocked vehicle. It is possible for children to open a locked door from the inside, which could result in an accident and/or serious personal injury.

! To prevent possible malfunction, avoid exposing the remote control to high levels of electromagnetic radiation.

If you can no longer lock or unlock the vehicle with the remote control, the batteries in the remote control are discharged, or the remote control is malfunctioning.

- ▶ Check the batteries in the remote control and replace them if necessary.
- ▶ If you do not have a spare transmitter battery at hand, use the key to open the driver's door and the charge socket flap (▷ page 177).

USA only:

This device complies with Part 15 of the FCC Rules. Operation is subject to the following two conditions:

1. This device may not cause harmful interference, and

2. this device must accept any interference received, including interference that may cause undesired operation.

Any unauthorized modification to this device could void the user's authority to operate the equipment.

The product label with FCC ID and IC certification number can be found in the battery case.

Canada only:

This device complies with RSS-210 of Industry Canada. Operation is subject to the following two conditions:

1. This device may not cause interference, and

2. this device must accept any interference received, including interference that may cause undesired operation of the device.

Any unauthorized modification to this device could void the user's authority to operate the equipment.

The product label with FCC ID and IC certification number can be found in the battery case.

! The remote control has an operating range of approximately 50 ft (15 meters).

This can fluctuate greatly as a consequence of local conditions (reflective or

[3] cabriolet only.

[4] coupé only.

absorbing objects) and interference emitted by other radio transmission systems. Similarly, the operating range fluctuates in line with the direction from which the remote control is activated.

To prevent theft, however, it is advisable to only unlock the vehicle when you are in close proximity to it.

Locking and unlocking from the outside

- **Selective unlocking:** Press button on the key once.
  All turn signal lamps flash once.
  The driver's door and the charge socket flap are unlocked.
- **Global unlocking:** Press button on the key twice.
  All turn signal lamps flash once again.
  The passenger door and the tailgate are unlocked in addition to the driver's door and the charge socket flap.
- **Global locking:** Press button on the key.
  With the doors, the tailgate(s), and the charge socket flap closed, the turn signal lamps flash three times.
  The indicator lamp on the central locking switch flashes (▷ page 53).
  The interior lamps come on and then go out again after 12 seconds.

Automatic locking

Auto-relock function

The vehicle will lock again automatically within approximately 60 seconds of unlocking with the key if neither the driver's nor passenger door is opened.

! To prevent an inadvertent lockout, never leave your key lying in the vehicle.

Drive lock function

The vehicle locks automatically when the ignition is switched on and the wheels are turning at vehicle speeds of approximately 8 mph (14 km/h) or more. The drive lock function is enabled at the factory.

- **Switching on:** Switch off the ignition.
- Press the central locking switch (▷ page 53) and button on the key simultaneously.
  An acoustic signal sounds.
  The drive lock function is switched on.
- **Switching off:** Switch off the ignition.
- Press the central unlocking switch (▷ page 53) and button on the key simultaneously.
  An acoustic signal sounds.
  The drive lock function is switched off.

Locking and unlocking from the inside

⚠ WARNING

When leaving the vehicle, always remove the key from the starter switch, take it with you, and lock the vehicle. Do not leave children unattended in the vehicle, or with access to an unlocked vehicle. A child's unsupervised access to a vehicle could result in an accident and/or serious personal injury.

You can lock and unlock the vehicle from inside using the central locking or unlocking switch. This can be useful, for example, if you want to unlock the passenger door from inside or lock the vehicle before starting to drive.

▶ **Locking:** Press central locking switch ①.
The indicator lamp on central locking switch ① comes on, when the starter switch is in position **1**.
The indicator lamp on central locking switch ① flashes, when the starter switch is in position **0**.
With the doors and the tailgate closed, the vehicle locks.

▶ **Unlocking:** Press central unlocking switch ②.
The vehicle unlocks and the indicator lamp on central locking switch ① goes out.

Opening the doors from the inside

You can open a locked door from the inside. Open door only when conditions are safe to do so.

▶ Pull on inside door handle ①.
With the driver's door open a warning signal sounds if the exterior lamps are switched on and the ignition is switched off.

Opening the upper tailgate on the coupé

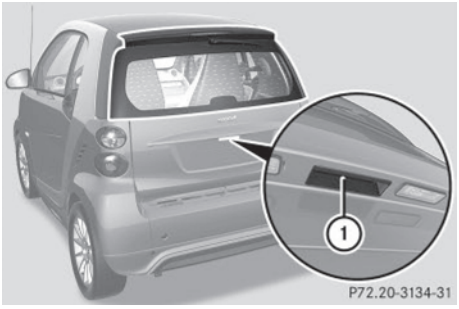

▶ Press button on the key twice.

▶ Press and hold button on the key for approximately two seconds.

or

▶ Pull the release handle in handle recess ① of the lower tailgate.
The upper tailgate is unlocked.

▶ Swivel the upper tailgate upwards to open.

Observe the information on loading the vehicle (▷ page 108).

For information on vehicle weights, see "Vehicle specification" (▷ page 215).

Opening the lower tailgate on the coupé

▶ Open the upper tailgate (▷ page 54).

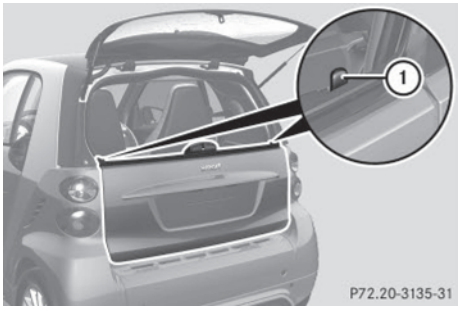

- Pull either of the release levers ① backwards.
  The lower tailgate is unlocked.
- Swivel the lower tailgate downwards to open.
  The lower tailgate is held in the horizontal position by means of the two retaining straps.

! When folded down, the lower tailgate can bear loads up to maximum of 220 lbs (100 kg).

Observe the information on loading the vehicle (▷ page 108).

For information on vehicle weights, see "Vehicle specification" (▷ page 215).

Closing the tailgate(s) on the coupé

⚠ **WARNING**

To prevent possible personal injury, always keep hands and fingers away from the cargo compartment opening when closing the tailgate(s). Be especially careful when small children are around.

- Swivel the lower tailgate upwards to close. Allow the two release levers to engage audibly.
- Swivel the upper tailgate downwards to close.

⚠ **WARNING**

When leaving the vehicle, always remove the key from the starter switch, take it with you, and lock the vehicle. Do not leave children unattended in the vehicle, or with access to an unlocked vehicle. A child's unsupervised access to a vehicle could result in an accident and/or serious personal injury.

Opening and closing the retractable soft top (cabriolet only)

You can fully open the retractable soft top with the key.

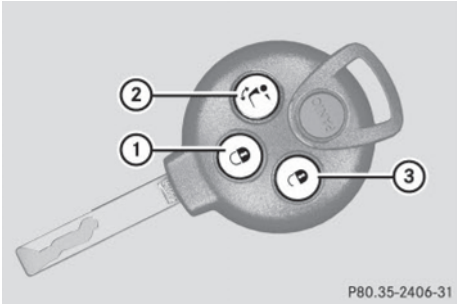

Key with remote control

① Lock button

② Opening the retractable soft top

③ Unlock button

▶ **Opening:** Press button ② on the key for approximately two seconds.
The retractable soft top opens.

Pressing symbols ③, ① or ② on the key with remote control while opening the retractable soft top will interrupt the opening procedure.

▶ **Closing:** Press symbol on the retractable soft top switch (▷ page 55).

WARNING

When closing the retractable soft top, make sure there is no danger of anyone being harmed by the closing procedure.

The remote control has an operating range of approximately 50 ft (15 meters). Take care that you do not open your vehicle's retractable soft top inadvertently.

Opening the tailgate on the cabriolet

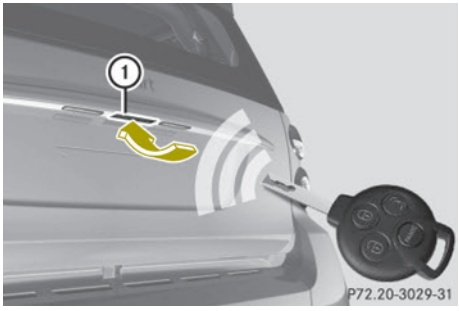

▶ Press button ③ on the key twice.

▶ Pull the release handle in handle recess ① of the tailgate.
The tailgate is unlocked.

▶ Swivel the tailgate downwards to open.

Opening and closing the rear soft top (cabriolet only)

You can open the rear soft top to ease loading and unloading.

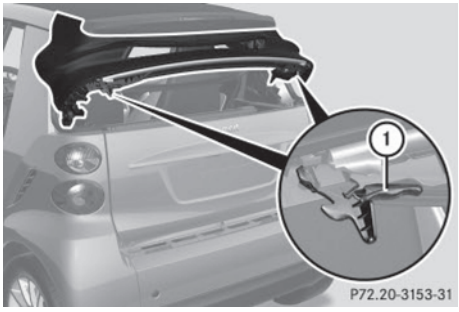

▶ **Opening:** Push release levers ①, located to the left and right of the retaining clip, upwards.

▶ Swivel the rear soft top upwards to open.

WARNING

To prevent possible personal injury, always keep hands and fingers away from the cargo compartment opening when closing the rear soft top. Be especially careful when small children are around.

- ▶ **Closing:** Swivel the rear soft top downwards to close.
- ▶ Pull soft top down.
- ▶ Pull release levers ①, located to the left and right of the retaining clip, downwards.
- ▶ Make sure the rear soft top is correctly locked in place on both sides.

Closing the tailgate on the cabriolet

⚠ WARNING

To prevent possible personal injury, always keep hands and fingers away from the cargo compartment opening when closing the tailgate. Be especially careful when small children are around.

! When closing the tailgate, you must first close the rear soft top. Otherwise you might break the release levers of the rear soft top.

- ▶ Swivel the tailgate upwards to close. Let the tailgate lock into place.

⚠ WARNING

When leaving the vehicle, always remove the key from the starter switch, take it with you, and lock the vehicle. Do not leave children unattended in the vehicle, or with access to an unlocked vehicle. A child's unsupervised access to a vehicle could result in an accident and/or serious personal injury.

Starter switch positions

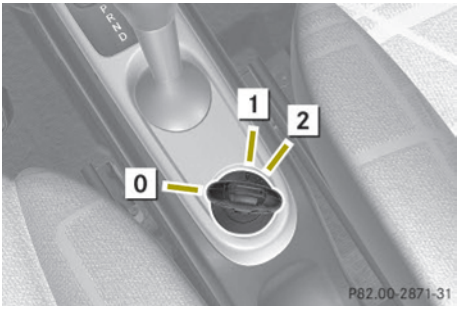

Starter switch

0	For removing key
1	Ignition (power supply for all electrical consumers) and driving position
2	Starting the drive system

When you switch on the ignition, the indicator and warning lamps (except low-beam headlamp indicator lamp, high-beam headlamp indicator lamp, and turn signal indicator lamps unless activated) in the instrument cluster come on. The indicator and warning lamps (except low-beam headlamp indicator lamp, high-beam headlamp indicator lamp, and turn signal indicator lamps if activated) will go out when the drive system is running. This indicates that the respective systems are operational.

When you start the drive system, READY appears in the multifunction display. The warning and indicator lamps will go out.

The pointer of the power gauge moves from "OFF" to "0" (▷ page 81).

Seats

Safety notes

WARNING

All seat adjustments, as well as fastening of seat belts, must be done before the vehicle is operated.

WARNING

When adjusting the seat, make sure no one becomes trapped.

Do not adjust the driver's seat while driving. Adjusting the seat while driving could cause the driver to lose control of the vehicle.

Never ride in a moving vehicle with the seat backrest in an excessively reclined position as this can be dangerous. You could slide under the seat belt in a collision. If you slide under the seat belt, it could apply force at the abdomen or neck, potentially causing serious or fatal injuries. The seat backrest and seat belts provide the best restraint when the wearer is in a position that is as upright as possible and seat belts are properly positioned on the body.

Your seat must be adjusted so that you can correctly fasten your seat belt.

Observe the following points:

- Adjust the seat backrest until your arms are slightly angled when holding the steering wheel.
- Adjust the seat to a comfortable seating position that still allows you to reach the accelerator/brake pedal safely. The position should be as far back as possible with the driver still able to operate the controls properly.
- Never place hands under the seat or near any moving parts while a seat is being adjusted.

Failure to do so could result in an accident and/or serious personal injury.

Observe the notes on the air bag system.

WARNING

Children 12 years old and under must be seated and properly secured in an appropriately sized infant restraint, toddler restraint, or booster seat recommended for the size and weight of the child. For additional information, see "Children in the vehicle".

A child's risk of serious or fatal injuries is significantly increased if the child restraints are not properly secured in the vehicle and/or the child is not properly secured in the child restraint.

WARNING

Contact an authorized electric drive smart center if the seats have become damaged.

The seat is an integral part of the vehicle's safety system in the same way as seat belts and air bags. Damage to the seats may reduce their ability to protect the occupants in an accident.

Seat adjustment

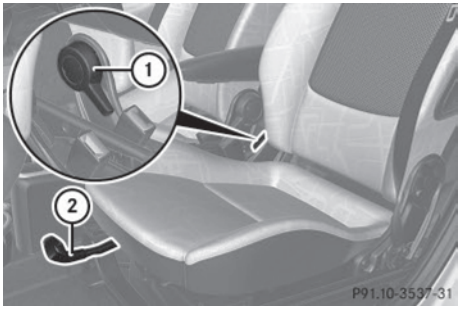

① Seat backrest tilt

② Seat fore and aft adjustment

Seat backrest tilt

▶ **Adjusting:** Sit down on the front seat.

▶ Pull adjustment lever ① upwards and adjust the seat backrest until your arms are slightly angled when holding the steering wheel.

▶ Release adjustment lever ① when the desired seat backrest tilt is reached. When you hear an audible click, the seat backrest is again fixed into place.

▶ Check for proper engagement before driving.

ⓘ When adjusting the tilt of the backrest without any load on the seat then hold on to the backrest with one hand.

Seat fore and aft adjustment

▶ Pull adjustment handle ② upwards and slide the seat to a seating position that still allows you to reach the accelerator/brake pedal safely.

▶ Release adjustment handle ② when the desired seating position is reached. When you hear an audible click, the seat is again fixed into place.

▶ Check for proper engagement before driving.

Seat height

The seat guide is inclined in the horizontal plane. Seat fore and aft adjustment also alters the seat height.

Armrest* on driver's seat

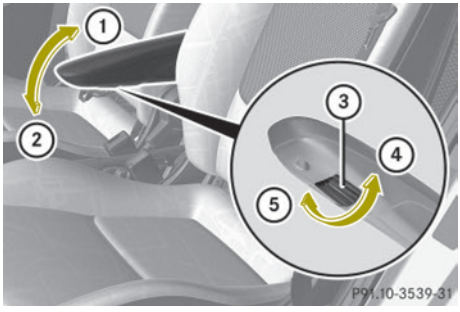

Folding up and down

▶ **Folding up:** Hold front of armrest and fold it up in direction of arrow ①.

▶ **Folding down:** Hold front of armrest and fold it down in direction of arrow ②.

Adjusting armrest angle

You can adjust the angle of the armrest when it is folded down.

▶ Turn thumb wheel ③.

- Direction of arrow ④: down
- Direction of arrow ⑤: up

Passenger seat

You can expand the cargo compartment by folding down the passenger seat.

Observe the loading instructions (▷ page 108).

Folding down

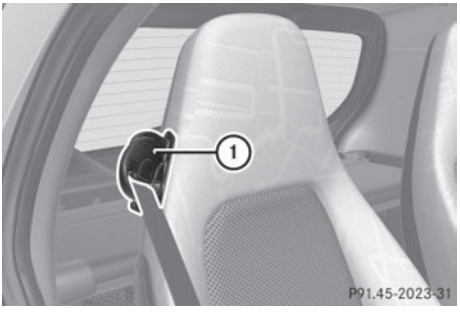

▶ Remove the seat belt from seat belt guide ①.

▶ Move the passenger seat backward as far as it will go.

* optional

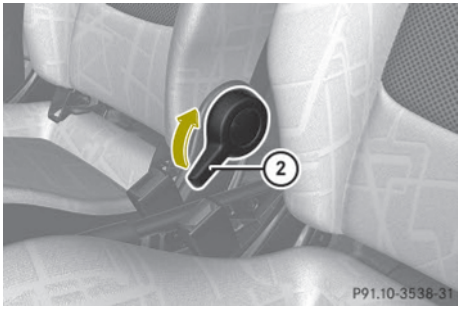

- ▶ Hold the backrest with one hand back.
- ▶ Pull adjustment lever ② upwards and unlock the seat backrest.
- ▶ Fold the seat backrest forward.

Folding back

- ▶ Pull adjustment lever ② upwards and unlock the seat backrest.
- ▶ Fold the seat backrest backward. When you hear an audible click, the seat backrest is again fixed into place.
- ▶ Check for proper engagement before driving.
- ▶ Place the seat belt back in seat belt guide ①.

WARNING

When folding the passenger seat backrest back to its upright position, please make sure

- nobody becomes trapped
- no obstacles are jammed in the lock
- the adjustment lever has audibly locked into position

A properly engaged passenger seat backrest will help to prevent stored objects in the cargo compartment from being thrown about and injuring vehicle occupants during

- braking
- vehicle maneuvers
- an accident

Seat heating*

The seat heating allows you to heat the driver's and passenger seat electrically.

The seat heating has two levels.

The indicator lamps on seat heating switch ① come on to show which heating level you have selected.

Level	Indicator lamps on the switch
off	No indicator lamp on
1	One indicator lamp on
2	Two indicator lamps on

- ▶ Make sure the key is in starter switch position **1**.
- ▶ **Switching on:** Press seat heating switch ① repeatedly until the desired seat heating level is reached.
- ▶ **Switching off:** Press seat heating switch ① repeatedly until all indicator lamps go out.

Switch on the seat heating and, at the same time, reduce the temperature in the vehicle interior. The high-voltage battery then consumes less energy.

If the seat heating is malfunctioning, the indicator lamp(s) on the switch come(s) on briefly when you press the switch and then go(es) out again. Contact an authorized smart center.

* optional

Mirrors

Adjust the interior and exterior rear view mirrors before driving so that you have a good view of the road and traffic conditions.

Exterior rear view mirrors

WARNING

Exercise care when using the passenger-side exterior rear view mirror. The mirror surface is convex (outwardly curved surface for a wider field of view). Objects in mirror are closer than they appear. Check your interior rear view mirror and glance over your shoulder to determine whether any vehicles are in the 'blind spot' of your field of vision, before changing lanes.

Power exterior rear view mirrors

The operating control is on the door control panel.

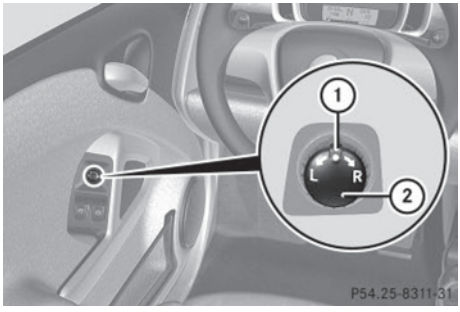

- Make sure the key is in starter switch position **1**.
- **Selecting the mirror:** Turn knob ① to the left for the driver's side exterior rear view mirror or to the right for the passenger side exterior rear view mirror.
- **Adjusting the mirror:** Move adjustment button ② up, down, left, or right to the desired setting.

Exterior rear view mirror heating

After switching on the rear window defroster, the exterior rear view mirrors will be heated automatically. This prevents icing up the exterior rear view mirrors and also creates a clear view when the exterior rear view mirrors have fogged up.

If the rear window defroster is automatically deactivated after approximately 10 minutes of operation, the exterior rear view mirror heating also deactivates.

- Make sure the key is in starter switch position **1**.
- **Switching on:** Switch on the rear window defroster (▷ page 103).
  The exterior rear view mirror heating is switched on.
- **Switching off:** Switch off the rear window defroster (▷ page 103).
  The exterior rear view mirror heating is switched off.

The exterior rear view mirror heating also switches off if the key is turned to starter switch position **0**.

Interior rear view mirror

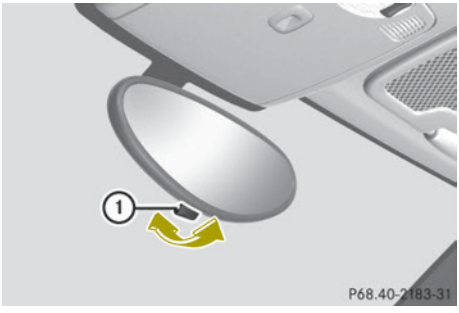

- **Adjusting the mirror:** Manually move the interior rear view mirror up, down, left, or right to the desired setting.
- **Selecting the antiglare position:** Tilt the interior rear view mirror to the antiglare position by moving lever ① forward or backward.

Seat belts

Fastening the seat belts

WARNING

Always fasten your seat belt before driving. Always make sure all of your passengers are properly restrained.

Failure to wear and properly fasten and position your seat belt greatly increases your risk of injuries and their likely severity in an accident. You and your passenger should always wear seat belts.

If you are ever in an accident, your injuries can be considerably more severe without your seat belt properly buckled.

Without your seat belt buckled, you are much more likely to hit the interior of the vehicle or be ejected from it. You can be seriously injured or killed.

In the same crash, the possibility of injury or death is lessened if you are properly wearing your seat belt. Air bags can only protect you if you are properly wearing your seat belt.

WARNING

Children 12 years old and under must be seated and properly secured in an appropriately sized infant restraint, toddler restraint, or booster seat recommended for the size and weight of the child. For additional information, see "Children in the vehicle".

A child's risk of serious or fatal injuries is significantly increased if the child restraints are not properly secured in the vehicle and/or the child is not properly secured in the child restraint.

WARNING

Never let more people ride in the vehicle than there are seat belts available. Make sure everyone riding in the vehicle is correctly restrained with a separate seat belt. Never use a seat belt for more than one person at a time.

WARNING

Never ride in a moving vehicle with the seat backrest in an excessively reclined position as this can be dangerous. You could slide under the seat belt in a collision. If you slide under it, the belt would apply force at the abdomen or neck, causing serious or even fatal injuries. The seat backrest and seat belt provide the best restraint when the wearer is in a position that is as upright as possible and the belt is properly positioned on the body.

WARNING

Observe "Safety notes" (▷ page 35).

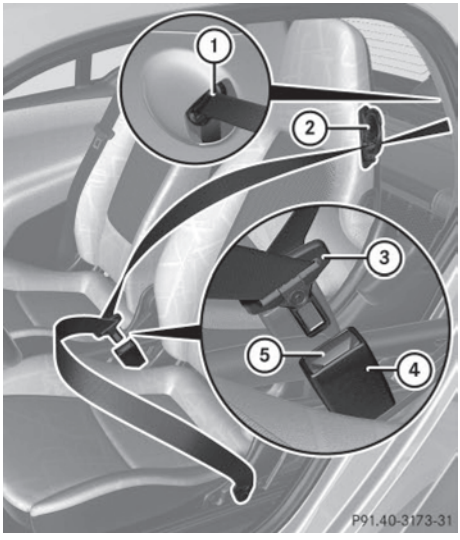

① Seat belt outlet
② Seat belt guide
③ Latch plate
④ Seat belt buckle
⑤ Release button

▶ **Fastening the seat belt:** With a smooth motion, pull the seat belt out of seat belt outlet ①.

▶ Place the shoulder portion of the seat belt across the top of your shoulder and the lap portion across your hips.

▶ Push latch plate ③ into seat belt buckle ④ until it clicks.

▶ If necessary, tighten the lap portion of the seat belt to a snug fit by pulling shoulder portion up.

▶ **Unfastening the seat belt:** Press release button ⑤.

▶ Allow the retractor to completely rewind the seat belt by guiding latch plate ③.

Proper use of seat belts

- Do not twist the seat belt when fastening.
- Adjust the seat belt so that the shoulder portion is located as close as possible to the middle of the shoulder (it should not touch the neck). Never pass the shoulder portion of the seat belt under your arm.
- Position the lap belt as low as possible on your hips (over hip joint) and not across the abdomen.
- Place the seat backrest in a position that is as upright as possible.
- Never use a seat belt for more than one person at a time.
- Do not fasten a seat belt around a person and another object at the same time. When using a seat belt to secure infant or toddler restraints or children in booster seats, always follow the child seat manufacturer's instructions.
- Check your seat belt during travel to make sure it is properly positioned.
- Make sure the seat belt is always fitted snugly. Take special care to maintain a snug fit when wearing loose clothing.

⚠ WARNING

Do not pass seat belts over sharp edges. They could tear.

Do not allow the seat belt to get caught in the door or in the seat adjustment mechanism. This could damage the seat belt.

Never attempt to make modifications to seat belts. This could impair the effectiveness of the seat belts.

Do not bleach or dye seat belts as this may severely weaken them. In a crash they may not be able to provide adequate protection.

Damaged seat belts or seat belts that were highly stressed in an accident must be replaced. Contact an authorized electric drive smart center.

Correct driver seat adjustment

⚠ WARNING

Observe "Safety notes" (▷ page 58).

▶ Adjust the driver's seat properly (▷ page 58).

Make sure that you

- are positioned as far away from the driver's front air bag as possible
- can reach steering wheel ① with your arms slightly bent at the elbows
- can fasten seat belt ② properly

- you have adjusted seat backrest ③ to a position that is as upright as possible
- you can move your legs freely
- you can depress the brake and accelerator pedal safely.

▶ Make sure the seat belt is fastened properly (▷ page 62).

Lighting

Exterior lamp switch

For safety, smart recommends that you drive with your low-beam headlamps on during the day. In certain countries, local laws dictate that low-beam headlamps are switched on automatically during operation of the vehicle.

ⓘ If you drive in countries where vehicles drive on the other side of the road than the country in which the vehicle is registered, you must have the headlamps modified for symmetrical low beams. Relevant information can be obtained at any authorized electric drive smart center.

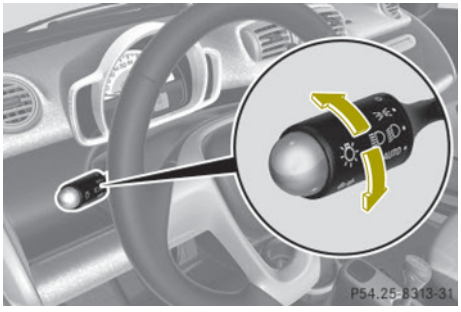

Exterior lamp switch

0	Lamps off
	Daytime running lamp mode*
≡D	Parking lamps
≡D	Low-beam headlamps or high-beam headlamps
AUTO	Automatic headlamp mode*

Parking lamps

You can switch on and off the parking lamps with the exterior lamp switch using the manual headlamp mode.

▶ **Switching on:** Turn the exterior lamp switch to position ≡D.
The parking lamps come on.
The following lamps also come on:
- Tail lamps
- License plate lamps
- Side marker lamps

Low-beam headlamps

You can switch on and off the low-beam headlamps with the exterior lamp switch using the manual headlamp mode.

▶ **Switching on:** Turn the exterior lamp switch to position ≡D.
The low-beam headlamps come on.
The low-beam headlamp indicator lamp ≡D in the instrument cluster comes on.
The following lamps also come on:
- Tail and parking lamps
- License plate lamps
- Side marker lamps

Automatic headlamp mode*

This feature is only available on vehicles with rain-light sensor*.

The following lamps come on and go out automatically depending on the brightness of the ambient light:
- Low-beam headlamps
- Tail and parking lamps
- License plate lamps
- Side marker lamps

⚠ **WARNING**
If the exterior lamp switch is set to position AUTO, the headlamps will not be automatically switched on under foggy conditions.

To minimize risk to you and to others, activate headlamps by turning exterior lamp switch to position [≡D] when driving or when traffic and/or ambient lighting conditions require you to do so.

In low ambient lighting conditions, only switch from position [AUTO] to [≡D] with the vehicle at a standstill in a safe location. Switching from position [AUTO] to [≡D] will briefly switch off the headlamps. Doing so while driving in low ambient lighting conditions may result in an accident.

The automatic headlamp feature is only an aid to the driver. The driver is responsible for the operation of the vehicle's lights at all times.

▶ Turn the exterior lamp switch to position [AUTO].
With the key in starter switch position **1**, the tail and parking lamps, the license plate lamps, and the side marker lamps will come on and go out automatically depending on the brightness of the ambient light.

With the engine running, the low-beam headlamps, the tail and parking lamps, the license plate lamps and the side marker lamps will come on and go out automatically depending on the brightness of the ambient light.

Daytime running lamp mode*

In USA, the daytime running lamp mode can be deactivated.

In Canada, the daytime running lamp mode is mandatory and therefore in a constant mode.

Depending on the vehicle equipment, your vehicle comes either with low-beam daytime running lamps or with LED daytime running lamps.

Switching on:

▶ Start the drive system.
The daytime running lamps are switched on.

On vehicles with low beam daytime running lamps the parking lamps also come on.

Switching off - vehicles without rain-light sensor*:

▶ Switch on the parking lamps [≡DC] or the low-beam headlamps [≡D].
The daytime running lamps are switched off.

Switching off - vehicles with rain-light sensor*:

▶ Switch on the parking lamps [≡DC] or the low-beam headlamps [≡D].
The daytime running lamps are switched off.

or

▶ Turn the exterior lamp switch to position [AUTO].
With the engine running, the low-beam headlamps, the tail and parking lamps, the license plate lamps and the side marker lamps will come on and go out automatically depending on the brightness of the ambient light.

Deactivating (USA only):

▶ Switch off the ignition.

▶ Remove the key from the starter switch.

▶ Switch on the high-beam flasher and press button ⓓ on the key simultaneously.
An acoustic signal sounds.

The daytime running lamp mode is deactivated.

* optional

Reactivating (USA only):

- ▶ Switch off the ignition.
- ▶ Remove the key from the starter switch.
- ▶ Switch on the high-beam flasher and press button ⓐ on the key simultaneously.
  An acoustic signal sounds.
  The daytime running lamp mode is reactivated.

Combination switch (high beam, high beam flasher and turn signals)

- ▶ Make sure the key is in starter switch position **1**.

High-beam headlamps and high-beam flasher

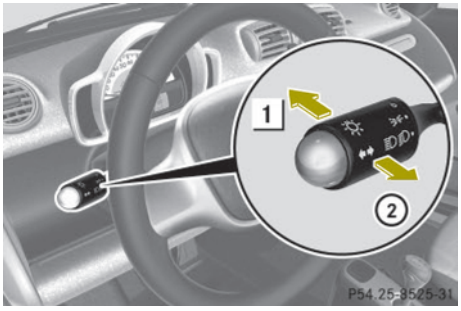

- ▶ Make sure the low-beam headlamps are switched on (▷ page 64).
- ▶ **Switching on:** Push the combination switch to position 1.
  The high-beam headlamps come on.
  The high-beam headlamp indicator lamp ≡D in the instrument cluster comes on.
- ▶ **Switching off:** Pull the combination switch in direction of arrow ② to its original position.
  The high-beam headlamps go out.
  The high-beam headlamp indicator lamp ≡D in the instrument cluster goes out.
- ▶ **High-beam flasher:** Pull the combination switch briefly in direction of arrow ②.

Turn signals

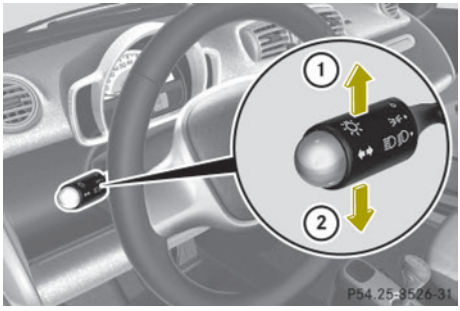

① Turn signals, right
② Turn signals, left

- ▶ **Switching on:** Push the combination switch in direction of arrow ① or ②.
  The corresponding turn signals flash.
  The corresponding turn signal indicator lamp ⇦ or ⇨ in the instrument cluster flashes.
  The combination switch resets automatically after major steering wheel movement.

ⓘ To signal minor directional changes such as changing lanes, push the combination switch only to the point of resistance and release. The corresponding turn signals will flash three times.

Coming home function

The interior lamps come on and then go out again after 12 seconds every time when you lock or unlock the vehicle.

When leaving the vehicle

- ▶ Remove the key from the starter switch.
- ▶ Exit the vehicle.
- ▶ Press button ⓐ on the key.
  The vehicle is locked.
  The interior lamps come on and then go out again after 12 seconds.

When returning to the vehicle

▶ Press button ⓐ on the key either once or twice.
The vehicle is either selectively or globally unlocked.
The interior lamps come on and then go out again after 12 seconds.

Ambient lighting*

The ambient lighting illuminates the vehicle interior with 6 LEDs when the low-beam headlamps are switched on. The LEDs can be dimmed.

The LEDS are located

- in the overhead control panel
- in the door pockets, driver's and passenger side
- in the storage trays to the left and right of the steering wheel

In addition to the ambient lighting, the footwells on the driver's and passenger side are also illuminated by separate lamps.

ⓘ When you open a door, the interior lighting comes on and the brightness of lamps in the footwells increases.

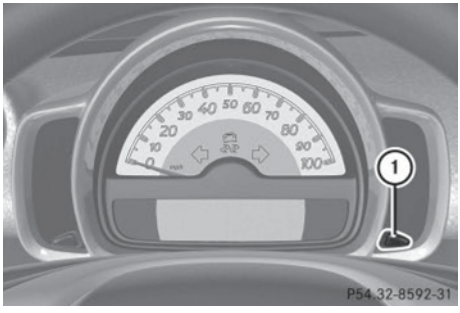

▶ Make sure the key is in starter switch position **1**.

▶ Switch on the parking lamps.

▶ **To brighten or dim ambient lighting:** Press button ① on the instrument cluster repeatedly until the desired setting is reached.
The current setting is stored.

ⓘ When adjusting the ambient lighting, the illumination level for instrument cluster is also changed (▷ page 83).

Front fog lamps

⚠ **WARNING**

Vehicles with rain-light sensor*:

In low ambient lighting or foggy conditions, only switch from position AUTO to ≡D with the vehicle at a standstill in a safe location. Switching from AUTO to ≡D will briefly switch off the headlamps. Doing so while driving in low ambient lighting conditions may result in an accident.

ⓘ Fog lamps will operate with the parking lamps and/or the low-beam headlamps on. Fog lamps should only be used in conjunction with low-beam headlamps. Consult your State or Province Motor Vehicle Regulations regarding permissible lamp operation.

ⓘ Vehicle with rain-light sensor*:

Fog lamps cannot be switched on manually with the exterior lamp switch in position AUTO. To switch on the fog lamps, turn the exterior lamp switch to position ≡D first.

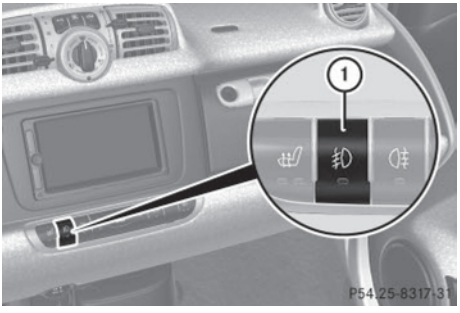

* optional

▶ Make sure the parking lamps or the low-beam headlamps are switched on.

▶ **Switching on:** Press switch ①.
The front fog lamps come on.
The indicator lamp in the switch comes on.

▶ **Switching off:** Press switch ① once more.
The front fog lamps go out.
The indicator lamp in the switch goes out.

Hazard warning flasher

The hazard warning flasher can be switched on at all times, even with the key removed from the starter switch.

▶ **Switching on:** Press hazard warning flasher switch ①.
All turn signal lamps are flashing.

▶ **Switching off:** Press hazard warning flasher switch ① once more.

Interior lighting

The interior lamp comes on for a period of time when you open the doors, or lock or unlock the vehicle with the key.

It goes out

- immediately after switching off the ignition with all doors closed
- after 30 seconds if the doors are not opened
- after 15 seconds if all doors are closed
- after 10 minutes if at least one door is open

The rocker switch can be set to three different positions.

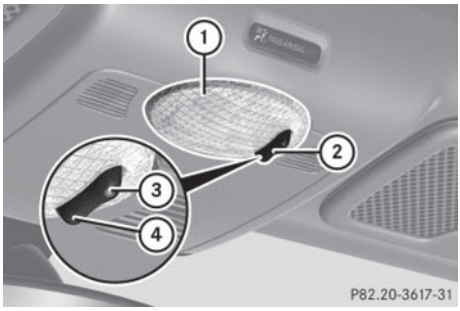

① Interior lamp
② Off
③ Switching on the automatic control
④ Continuous operation

Automatic control

▶ Set the rocker switch to position ③.
The interior lamp comes on for a period of time.

Switching off

▶ Set the rocker switch to position ②.
The interior lamp is permanently switched off.

Continuous operation

▶ Set the rocker switch to position ④.
The interior lamp is permanently switched on.

! When leaving the vehicle, make sure the interior lamp is not set to continuous operation and none of the doors is left open for a long period of time.
Doing otherwise could result in a discharged battery.

Windshield wipers

Switching windshield wipers on and off

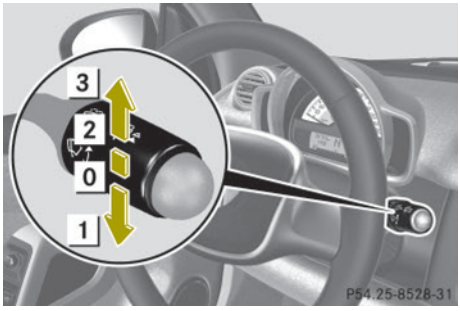

Example illustration coupé

▶ Make sure the key is in starter switch position **1**.

▶ **Switching on:** Turn the wiper switch to position 2 or 3, depending on the intensity of the rain.

! Do not operate the windshield wipers when the windshield is dry. Dust that accumulates on a windshield might scratch the glass and/or damage the wiper blades when wiping occurs on a dry windshield. If it is necessary to operate the windshield wipers in dry weather conditions, always operate the windshield wipers with windshield washer fluid.

! If anything blocks the windshield wipers (leaves, snow, etc.), switch them off immediately.

For safety reasons, stop the vehicle in a safe location and

- - remove the key from the starter switch
  - engage the parking brake

  before attempting to remove any blockage.
- Remove blockage.
- Turn the windshield wipers on again.

▶ **Switching off:** Turn the wiper switch to position 0.

Intermittent wiping

Only switch on intermittent wiping under wet weather conditions or in the presence of precipitation.

Vehicles with rain-light sensor*: When you select intermittent wiping, the sensor is activated. The sensor automatically sets a suitable wiping interval depending on the wetness of the sensor surface.

! Vehicles with rain-light sensor*:

Do not leave windshield wipers in intermittent setting when the vehicle is taken to an automatic car wash or during windshield cleaning. Windshield wipers will operate in the presence of water sprayed on the windshield, and windshield wipers may be damaged as a result.

! Vehicles with rain-light sensor*:

If you have set intermittent wiping, dirt on the surface of the sensor or optical effects may cause the windshield wipers to wipe in an undesired fashion. This could then damage the windshield wiper blades or scratch the windshield. You should therefore switch off the windshield wipers when weather conditions are dry.

▶ Make sure the key is in starter switch position **1**.

▶ **Activating intermittent wiping:** Turn the wiper switch to position 1.

After the initial wipe, pauses between wipes are automatically controlled depending on the vehicle speed and by the rain-light sensor*.

▶ **Deactivating intermittent wiping:** Turn the wiper switch to position 0.

* optional

Wiping with windshield washer fluid

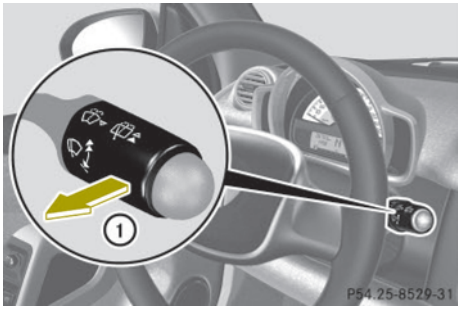

Example illustration coupé

- ▶ Pull the wiper switch in direction of arrow ① and hold it in position.
  The windshield wipers operate with windshield washer fluid.
- ▶ Release the wiper switch.
  The windshield wipers will wipe three more times.

ⓘ To prevent smears on the windshield, or noisy/chattering wiper blades, wipe with windshield washer fluid periodically even when it is raining.

Single wipe

- ▶ Pull the wiper switch briefly in direction of arrow ①.
  The windshield wipers wipe one time with windshield washer fluid.

Rear window wiper/washer (coupé only)

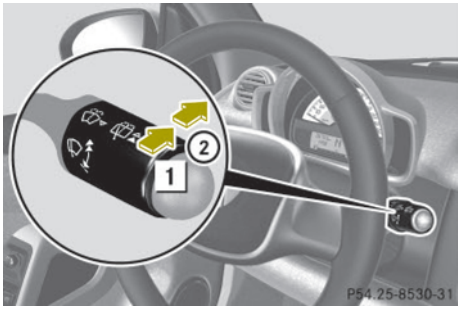

- ▶ Make sure the key is in starter switch position **1**.
- ▶ **Activating intermittent wiping:** Push the wiper switch to position 1.
- ▶ **Wiping with windshield washer fluid:** Push the wiper switch in direction of arrow ② and hold in position until the rear window is clean.
- ▶ Release the wiper switch.
  The rear window wiper will wipe three more times.
  Intermittent wiping is still activated.
- ▶ **Deactivating intermittent wiping:** Pull the wiper switch back to start position.

ⓘ The rear window wiper wipes one time when reverse gear **R** is engaged with the windshield wipers switched on.

Soft top system (cabriolet only)

Introduction

The soft top system of the smart cabriolet consists of a

- retractable soft top
- rear soft top
- side rails

You can remove the side rails over the doors when you open the retractable soft top and open the rear soft top.

ⓘ Opening the rear soft top is possible after the retractable soft top has been opened completely.

Notes on the soft top system

❗ When transporting long objects inside the vehicle, make sure they do not press against the retractable soft top when it is closed.

When carrying objects that protrude from the rear of the vehicle, make sure they are not resting on the retaining clips.

When loading, make sure no sharp objects come into contact with the soft top or the rear window.

Do not place any evenly distributed loads with a weight of more than 165 lbs (75 kg) on the rear soft top when folded down.

Make sure the high-mounted brake lamp is not concealed.

! Do not block the soft top system's locking apertures.

Only place the side rails in the designated storage space of the tailgate.

! Do not sit on the folded-down rear soft top.

Do not fold down the rear soft top at temperatures below 14°F (-10°C).

Do not place any pointed, sharp-edged, hot (above 176°F [80°C]), incandescent or burning objects on the soft top's lining.

Do not apply wax to the soft top fabric and select only wax-free washing products when using an automatic car wash.

Only drive with the retaining clips closed, as exhaust fumes could otherwise reach the vehicle's interior.

! Please keep in mind that weather conditions can sometimes change rapidly. Make sure to close the retractable soft top and the rear soft top when leaving the vehicle. If water enters the vehicle interior, vehicle electronics could be damaged which is not covered by the smart Limited Warranty.

Opening and closing the retractable soft top

You can open and close the retractable soft top when the vehicle is either stationary or in motion.

⚠ **WARNING**

Never operate the retractable soft top if there is the possibility of anyone being harmed by the opening or closing procedure.

⚠ **WARNING**

The retractable soft top is made out of fabric. In the event of an accident, the fabric may tear. This may result in an opening in the roof.

In a vehicle rollover, occupants not wearing their seat belts or not wearing them properly may be thrown out of the opening. Such an opening also presents a potential for injury for occupants wearing their seat belts properly as entire body parts or portions of them may protrude from the passenger compartment.

⚠ **WARNING**

When leaving the vehicle, always remove the key from the starter switch, take it with you, and lock the vehicle. Do not leave children unattended in the vehicle, or with access to an unlocked vehicle. A child's unsupervised access to a vehicle could result in an accident and/or serious personal injury.

! To avoid damaging the seals, do not transport any objects with sharp edges which can stick out of the retractable soft top.

Do not open the retractable soft top if there is snow or ice on the roof, as this could result in malfunctions.

If you cannot open or close the retractable soft top due to a malfunction contact Roadside Assistance or an authorized electric drive smart center.

ⓘ To avoid draining the battery, leave the drive system running when opening and closing the retractable soft top.

Opening from outside

You can open the retractable soft top completely with the key.

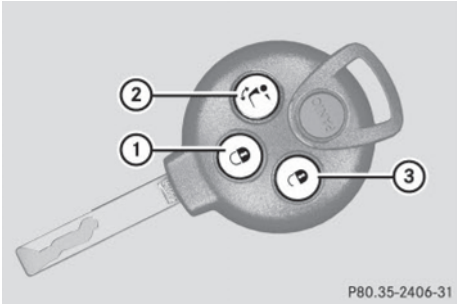

Key with remote control

① Lock button

② Opening the retractable soft top

③ Unlock button

▶ Press button ② on the key for approximately two seconds.
The retractable soft top opens completely.

Opening from the inside

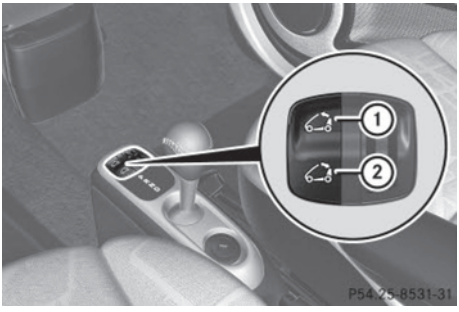

▶ Make sure the key is in starter switch position **1**.

▶ Press symbol ② on the retractable soft top switch until the desired position is reached or the retractable soft top is opened completely.

or

▶ Press symbol ② on the retractable soft top switch briefly.
The retractable soft top opens completely.

Pressing symbol ① or ② on the retractable soft top switch while opening the retractable soft top will interrupt the opening procedure.

Closing

For safety reasons, you can only close the retractable soft top using the retractable soft top switch inside the vehicle.

▶ Make sure the key is in starter switch position **1**.

▶ Press symbol ① on the retractable soft top switch until the retractable soft top is closed.

Opening and closing the rear soft top

You can open and close the rear soft top when the vehicle is either stationary or in motion.

WARNING

Never operate the rear soft top if there is the possibility of anyone being harmed by the opening or closing procedure.

Make sure objects are not stacked too high in the cargo compartment. They could get damaged when opening or closing the rear soft top.

When the rear soft top is folded down, the side rails are accessible. To prevent theft, you should remove the side rails and store them in the storage compartment of the tailgate or close the soft top system.

▶ Make sure the key is in starter switch position **1**.

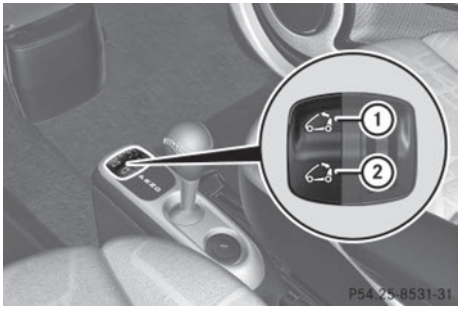

Retractable soft top switch
① Closing
② Opening

Opening the rear soft top

- ▶ Press symbol ② on the retractable soft top switch or button on the key until the retractable soft top has opened completely.
- ▶ Release retractable soft top switch ② or button on the key.
- ▶ Press symbol ② on the retractable soft top switch once more until the rear soft top has folded down completely.

Closing the rear soft top

- ▶ Press symbol ① on the retractable soft top switch until the rear soft top has folded up completely.
- ▶ Release retractable soft top switch ①.

If you release the retractable soft top switch while driving before the rear soft top has closed completely, the rear soft top will fold down again.

Removing the side rails

- ▶ Open the retractable soft top (▷ page 55).
- ▶ Open the rear soft top (▷ page 72).
- ▶ Open the driver's and passenger door when conditions are safe to do so.
- ▶ Open the tailgate (▷ page 56).

- ▶ Pull handle ① on the inside of the tailgate backward.
- ▶ Lift up the storage compartment cover.

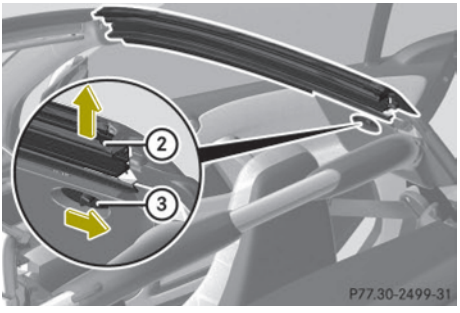

- ▶ Push release lever ③ of side rail ② backward.
  Side rail ② can be lifted at the rear end, but remains secured.
- ▶ Push release lever ③ backward again.

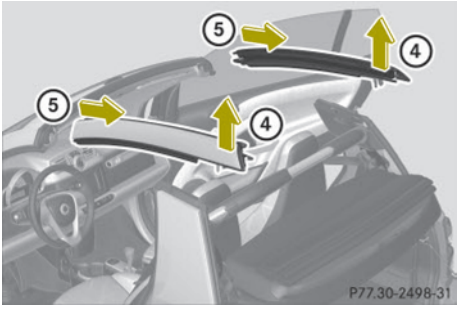

- ▶ Carry out the following steps when conditions are safe to do so.
- ▶ First lift the side rail at the rear end in direction of arrows ④.
- ▶ Then remove it in direction of arrows ⑤.

Storing the side rails

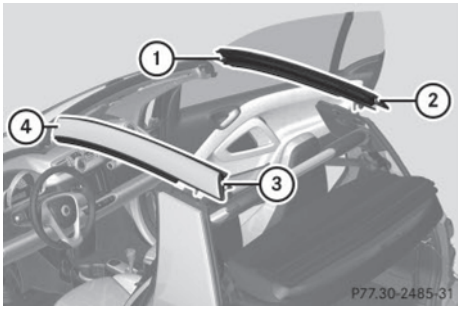

① Front right
② Rear right
③ Rear left
④ Front left

- ▶ Store the side rails in the storage compartment of the tailgate with the painted side facing down in the designated order ① to ④.

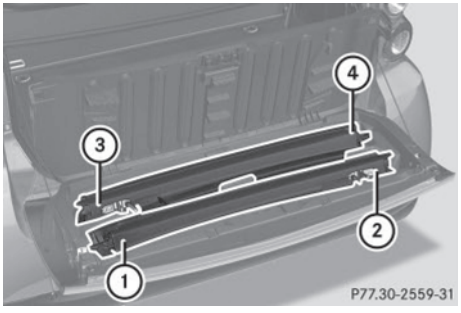

① Front right
② Rear right
③ Rear left
④ Front left

- ▶ Close the storage compartment cover.
- ▶ Press on the "PRESS" marking in the middle of the storage compartment cover until it engages audibly.

⚠ WARNING

Always close the storage compartment cover properly when storing the side rails. Otherwise occupants could be injured by the side rails moving about during

- braking
- vehicle maneuvers
- an accident

- ▶ Close the tailgate. Let the tailgate lock into place.
- ▶ Close the driver's and passenger door.
- ▶ Open the side windows if desired.

! Make sure the storage compartment cover is closed before closing the tailgate. Otherwise the tailgate could jam.

Mounting the side rails

- ▶ Open the driver's and passenger door when conditions are safe to do so.
- ▶ Open the tailgate.

- ▶ Pull handle ① on the inside of the tailgate backward.
- ▶ Lift up the storage compartment cover.
- ▶ Remove the side rails from the storage compartment in the tailgate.

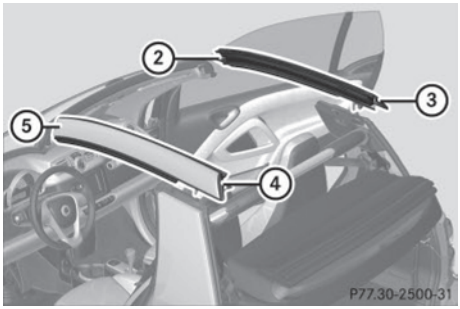

② Front right
③ Rear right
④ Rear left
⑤ Front left

▶ Install the side rails with the respective front end ② or ⑤ first.

⚠ WARNING

Make sure the side rails are properly mounted. Otherwise the side rails could disengage while driving and injure you and other persons.

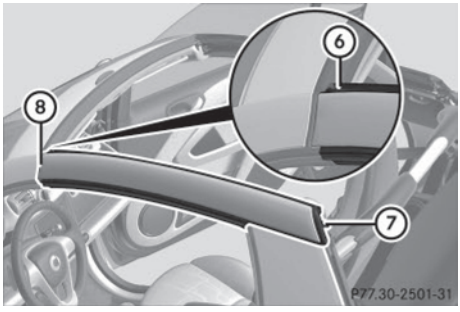

▶ Take one side rail and start by attaching it to front end ⑧.
▶ Make sure the seal of the side rail is facing up at position ⑥ and is not pinched.
▶ Push the side rail at rear end ⑦ downwards until it audibly engages into place twice.
▶ Install the side rail on the other side in the same manner.

! Make sure the side rails are installed correctly. Otherwise the side rails may not function properly or may be damaged.

▶ Close the storage compartment cover.
▶ Press on the "PRESS" marking in the middle of the storage compartment cover until it engages audibly.
▶ Close the tailgate. Let the tailgate lock into place.
▶ Close the driver's and passenger door.
▶ Open the side windows if desired.

! Make sure the storage compartment cover is closed before closing the tailgate. Otherwise the tailgate could jam.

Side windows

Opening and closing the side windows

Opening and closing the power windows

⚠ WARNING

Do not keep any part of your body up against the side window pane when opening a window. The downward motion of the pane may pull that part of your body down between the window pane and the door frame and trap it there. If there is a risk of entrapment, release the switch and pull up the top of the switch to close the window.

⚠ WARNING

When closing the windows, make sure there is no danger of anyone being harmed by the closing procedure.

The closing of the side windows can be immediately stopped by releasing the switch.

When leaving the vehicle, always remove the key from the starter switch, take it with you, and lock the vehicle. Do not leave children unattended in the vehicle, or with access to an unlocked vehicle. A child's unsupervised access to a vehicle could

result in an accident and/or serious personal injury.

The switches for both power windows are on the driver's door. In addition, there is a switch for the passenger side on the passenger door.

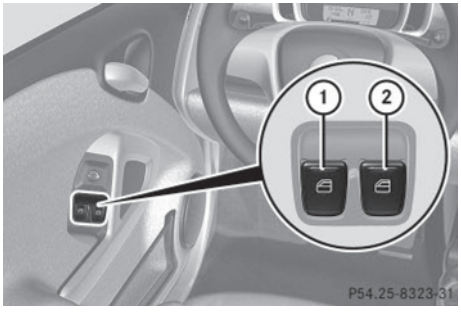

① Side window driver's door

② Side window passenger door

- Make sure the key is in starter switch position **1**.
- **Opening:** Press and hold the top of the respective switch.
  The corresponding side window moves downwards until you release the switch.
- **Closing:** Pull and hold the top of the respective switch.
  The corresponding side window moves upwards until you release the switch.
- **Automatic opening:** Press the top of the respective switch briefly.
  The corresponding side window opens completely.
- **Stopping during automatic opening:** Press or pull the top of the respective switch again.
  The corresponding side window stops immediately.

Driving and parking

Starting

⚠ WARNING

Make sure absolutely no objects are obstructing the pedals' range of motion. Keep the driver's footwell clear of all obstacles. If there are any floormats* or carpets in the footwell, make sure the pedals still have sufficient clearance.

During sudden acceleration or braking maneuvers, the objects could get caught between or beneath the pedals and restrict your ability to brake or accelerate. This could lead to accidents and/or injury.

⚠ WARNING

A vehicle with an electric motor produces significantly lower noise levels than a vehicle with a combustion engine. Other motorists or pedestrians, especially those who are visually or hearing impaired, may be unable to hear your vehicle while it is in motion. This is particularly true when driving at lower speeds and during parking maneuvers. At all times, it is the responsibility of the driver to be aware of their surroundings, especially in these low speed situations. Otherwise other road users could be seriously or fatally injured.

Vehicles equipped with an Acoustic Vehicle Indication* emit a certain noise. Thus, your vehicle will be better noticed by other road users at low speeds (▷ page 48).

- Fasten the seat belt.
- Depress the brake pedal.
- Insert the key into the starter switch.
- Move the gear selector lever to position **P** or **N**.
  P or **N** appears in the transmission position indicator.
- Turn the key to starter switch position **2** (▷ page 57). Hold the key until READY

* optional

appears in the multifunction display (▷ page 87).
The pointer of the power gauge moves from "OFF" to "0" (▷ page 81).

Driving

The vehicle has a crawler function. The vehicle moves forward when the brake pedal is released.

- ▶ Depress the brake pedal.
- ▶ Move the gear selector lever to drive position **D**.
  D appears in the transmission position indicator.
- ▶ Release the brake pedal.
  The vehicle moves forward.
- ▶ Depress the accelerator pedal smoothly.
  The vehicle accelerates.

Reversing the vehicle

Shift the transmission into reverse gear **R** only when the vehicle is stopped in order to avoid damaging the transmission.

You can drive in reverse gear at a speed of up to 9 mph (15 km/h).

The vehicle has a crawler function. Thevehicle moves forward when the brakepedal is released.

- ▶ Depress the brake pedal.
- ▶ Move the gear selector lever to reverse gear **R**.
  R appears in the transmission position indicator.
- ▶ Release the brake pedal.
  The vehicle moves forward.
- ▶ Depress the accelerator pedal smoothly.
  The vehicle accelerates.

Parking

WARNING

With the drive system inactive, there is no power assistance for the brake and steering systems. In this case, it is important to keep in mind that a considerably higher degree of effort is necessary to brake and steer the vehicle. Adapt your driving accordingly.

WARNING

Vehicle movement can cause serious personal injury. Therefore, always do the following before exiting and leaving the vehicle:

- Keep right foot on the brake pedal.
- Engage the parking brake.
- Move the gear selector lever to park position **P**.
- Slowly release the brake pedal.
- When parked on an incline, always turn the front wheels towards the curb.
- Turn the key to starter switch position **0** and remove the key from the starter switch.
- Take the key with you and lock the vehicle when leaving.

- ▶ Properly stop and park the vehicle.
- ▶ Depress the brake pedal.
- ▶ Engage the parking brake (▷ page 77).
  When the ignition is switched on, the brake warning lamp BRAKE (USA only) or (!) (Canada only) in the instrument cluster comes on.
- ▶ Release the brake pedal.

Parking brake

The parking brake serves to secure the vehicle against rolling away when it is stationary or parked.

WARNING

Engaging the parking brake while the vehicle is in motion can cause the rear wheels to lock up. You could lose control of the vehicle and cause an accident. In addition, the vehicle's brake lights do not light up when the parking brake is engaged.

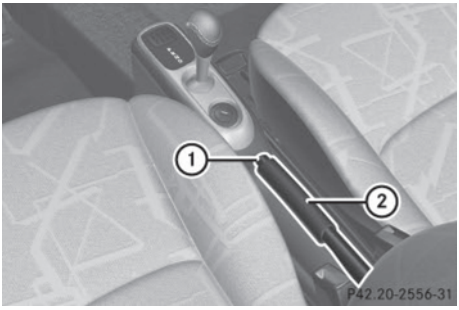

- **Releasing:** Depress the brake pedal.
- Pull up slightly on parking brake lever (2) and press release button (1).
- Push parking brake lever (2) down as far as it will go.
  When the ignition is switched on, the brake warning lamp BRAKE (USA only) or (!) (Canada only) in the instrument cluster goes out.
- **Engaging:** Pull up parking brake lever (2) firmly.
  When the ignition is switched on, the brake warning lamp BRAKE (USA only) or (!) (Canada only) in the instrument cluster comes on.

WARNING

Getting out of your vehicle with the transmission not fully engaged in park position **P** is dangerous. When the drive system is switched off and the brakes are released, the vehicle can be moved freely with the gear selector lever in all positions except park position **P**. Also, when parked on an incline, park position **P** alone may not prevent your vehicle from moving, possibly hitting people or objects.

Always engage the parking brake in addition to shifting to park position **P**.

When parked on an incline, always turn the front wheels towards the curb.

WARNING

When leaving the vehicle, always remove the key from the starter switch, take it with you, and lock the vehicle. Do not leave children unattended in the vehicle, or with access to an unlocked vehicle. Children could release the parking brake and/or move the gear selector lever from park position **P**, either of which could result in an accident and/or serious personal injury.

Brake pedal

The brake pedal has two brake circuits independent of each other. When the ignition is switched on, a brake servo is used during braking to increase pedal force.

WARNING

Make sure absolutely no objects are obstructing the pedals' range of motion. Keep the driver's footwell clear of all obstacles. If there are any floormats* or carpets in the footwell, make sure the pedals still have sufficient clearance.

During sudden acceleration or braking maneuvers, the objects could get caught between or beneath the pedals and restrict your ability to brake or accelerate. This could lead to accidents and/or injury.

WARNING

Considerably more effort will be required to apply the brakes if

- the brake servo has failed
- a brake circuit has failed
- the ignition is switched off, e.g. for towing the vehicle

The braking distance is likewise greater.

* optional

Make sure the drive system is active whenever the vehicle is rolling. Have the brake system repaired at an authorized electric drive smart center, if there is a fault in the brake system.

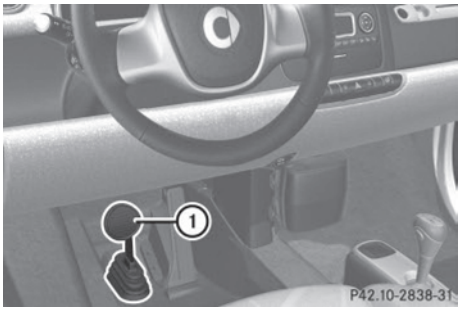

If a brake circuit has failed (▷ page 167), you must depress brake pedal ① further down to achieve the same effect and the braking distance is increased.

The brake servo will only function with the ignition switched on.

Switching off the drive system

WARNING

Do not turn off the drive system before the vehicle has come to a complete stop. With the drive system not running, there is no power assistance for the brake and steering systems. In this case, it is important to keep in mind that a considerably higher degree of effort is necessary to brake and steer the vehicle.

- ▶ Depress the brake pedal.
- ▶ Move the gear selector lever to park position **P**.
  The transmission position indicator should be on P

Always engage the parking brake in addition to shifting to park position **P**.

- ▶ Release the brake pedal.
- ▶ Turn the key to starter switch position **0**.
- ▶ Remove the key from the starter switch. The electronic immobilizer is activated.

Transmission

Shifting procedure

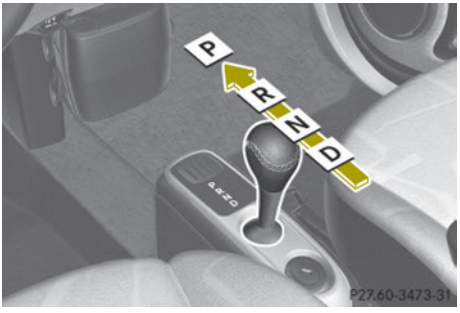

Gearshift pattern for transmission

P	Park position
R	Reverse gear
N	Neutral position
D	Drive position

Select a gear:

- ▶ Switch on the ignition.
- ▶ Depress the brake pedal.
- ▶ Move the gear selector lever to the desired position.

Steering wheel paddle shifters* (for recuperation)

WARNING

The operating condition of the high-voltage battery (e.g. not yet at normal operating temperature or fully charged) influen-

* optional

▷▷

ces the braking effect of the electric motor.

In overrun or braking mode, the motor's braking effect may therefore be reduced or may not be present at all.

As a result of the reduced engine braking effect, you may cause an accident and injure yourself or others.

Compensate for the reduced engine braking effect by pressing the brake pedal accordingly, as required.

Using the steering wheel paddle shifters*, you can increase or decrease the recuperation in overrun phases. Recuperation takes place when you release the accelerator pedal. The electric motor will then be used as a generator and energy will be regained while driving. The regained energy is stored in the high-voltage battery. High recuperation decelerates your vehicle stronger.

In overrun phases, there are three levels of recuperation:

- no recuperation (level 0, coasting)
- moderate recuperation (level 1)
- high-level recuperation (level 2)

The amount of recuperation in overrun mode is displayed in the power gauge (▷ page 81).

The set mode for recuperation is shown in the recuperation display (▷ page 84).

When you switch on the ignition, level 1 is automatically preset.

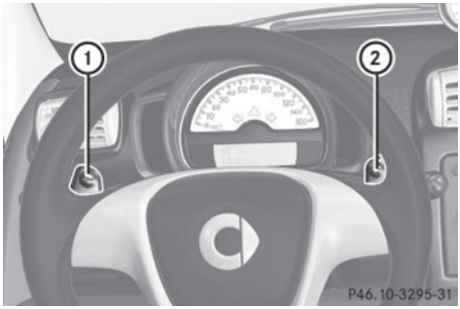

① Left steering wheel paddle shifter (minus)

② Right steering wheel paddle shifter (plus)

▶ **Decrease recuperation:** Pull left steering wheel paddle shifter ①.

▶ **Increase recuperation:** Pull right steering wheel paddle shifter ②.

Use the different levels 0 to 2 for conditions as described below:

Level 0	Driving without frequent breaking. No sharp bends on the road ahead. Maximum kinetic energy remains for the vehicle.
Level 1	Normal driving, standard setting.
Level 2	Sporty driving. The break pedal has to be depressed less often, as the deceleration due to recuperation is higher than in level 1. The energy efficiency is substantially higher than if the vehicle is decelerated by depressing the brake pedal.

At levels 1 and 2 the vehicle can be steplessly decelerated by depressing the brake pedal.

* optional

Under certain circumstances, in overrun phases recuperation does not work as described above. This may be e. g the case if the high-voltage battery is already fully charged or has not reached operating temperature.

Driving tips

Driving on uphill grades

WARNING

The hill-start assist system is not designed to function as a parking brake and does not prevent the vehicle from moving when parked on an incline.

Always engage the parking brake in addition to shifting to park position **P**.

When the hill-start assist system stops braking the vehicle, it can roll backwards.

If you open the driver's door, the hill-start assist system is deactivated and a warning signal sounds.

Your vehicle has a hill-start assist system.

On uphill grades the hill-start assist system maintains the pressure in the brake system for approximately one second after you have released the brake pedal. Therefore, you can start off smoothly without the vehicle moving immediately after releasing the brake pedal.

- ▶ Release the brake pedal.
- ▶ Apply sufficient pressure to the accelerator pedal to drive off.

On uphill grades with higher inclination, the hill-start assist system will release the pressure in the brake system after approximately two seconds. A warning signal sounds and the transmission position indicator shows a flashing N in order to warn you of the vehicle rolling backwards.

- ▶ Press the brake pedal.
- ▶ Release the brake pedal.
- ▶ Apply sufficient pressure to the accelerator pedal to drive off.

The hill-start assist system is inactive if you start off with the parking brake engaged.

Recuperation

If the high-voltage battery is fully charged or too cold, only limited recuperation power will be available.

The vehicle can not be decelerated or limited in being decelerated by using the accelerator pedal, if

- the gearshift selector lever is in position **D** and the vehicle is rolling backwards
- the gearshift selector lever is in position **R** and the vehicle is rolling forwards.

On uphill grades, the vehicle could possibly be not or only restricted being held from the crawler function.

Instrument cluster

Charge level and power gauges

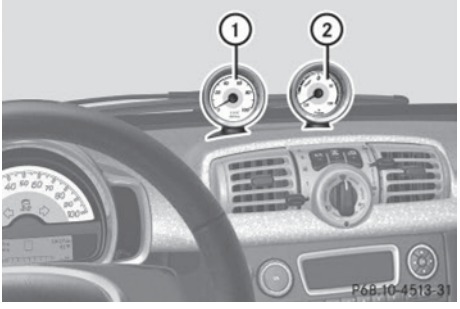

① Charge level gauge

② Power gauge

The gauges can be turned by approximately 90°.

The illumination for both gauges comes on when you switch on the ignition and the exterior lighting.

Charge level gauge

! Do not hang any objects on the charge level gauge.

This could cause the charge level gauge to be torn from its mountings and be damaged.

The charge level gauge ① displays charge status of the high-voltage battery as a percentage.

When the High-voltage Battery at Reserve Level message appears in the multifunction display while the drive system is in operation, the high-voltage battery has reached the reserve level.

i If the charge level of the high-voltage battery has dropped below 20 %, recharge it at:

- an AC power socket (▷ page 114)
- a private wall box (▷ page 115)
- a public charging station (▷ page 117)

Power gauge

⚠ WARNING

The operating condition of the high-voltage battery (e.g. not yet at normal operating temperature or fully charged) influences the braking effect of the electric motor.

In overrun or braking mode, the motor's braking effect may therefore be reduced or may not be present at all.

As a result of the reduced engine braking effect, you may cause an accident and injure yourself or others.

Compensate for the reduced engine braking effect by pressing the brake pedal accordingly, as required.

! Do not hang any objects on the power gauge.

This could cause the power gauge to be torn from its mountings and be damaged.

Power gauge ② contains two segments:

- Section right of 0

  Power gauge ② indicates the current power that the drive system delivers to the rear wheels. 100 % correspond to 55 kW peak power.
- Section left of 0

  When you release the accelerator pedal or when you depress the brake pedal, the electric motor operates as a generator. Electric current is produced and stored in the high-voltage battery. As long as the high-voltage battery is being charged, the electric motor simulates an engine brake.

When the pointer of power gauge ② is in the "OFF" position, the vehicle is not ready to drive, because:

- the drive system has not been started
- the gear selector lever has not been moved to position **N** or **P** when starting the drive system
- the charging cable is connected to the vehicle
- there is not enough power from the high-voltage battery
- a problem occured in the high-voltage system

After the drive system has been started, the pointer of power gauge ② moves to position **0**. READY appears in the multifunction display (▷ page 87). The vehicle is ready to drive.

Adjusting instrument cluster illumination

You can adjust the illumination of

- the switches and dials in the instrument cluster
- the radio
- the climate control panel
- the charge level and power gauges

Five illumination levels are available.

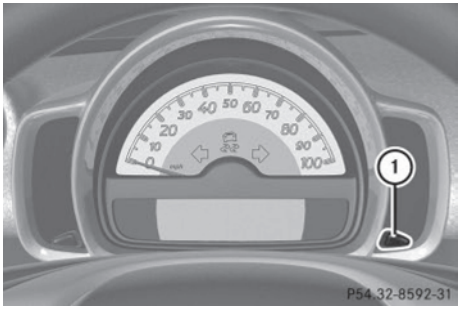

- ▶ Make sure the key is in starter switch position **1**.
- ▶ Switch on the parking lamps.
- ▶ **To brighten or dim illumination:** Press button ① on the instrument cluster repeatedly until the desired setting is reached.
  The current setting is stored.

Control system

Introduction

The control system is activated when you turn the key in the starter switch to position **1**.

⚠ WARNING

A driver's attention to the road and traffic conditions must always be his/her primary focus when driving.

In order to avoid distraction which could lead to an accident, the driver should select features and change settings in the control system only vehicle at a standstill or when traffic and road conditions permit it to be done safely.

Bear in mind that at a speed of just 30 mph (approximately 50 km/h), your vehicle is covering a distance of 44 feet (approximately 14 m) every second.

Control lever

You can select the displays in the multifunction display and change settings in the control system with the control lever.

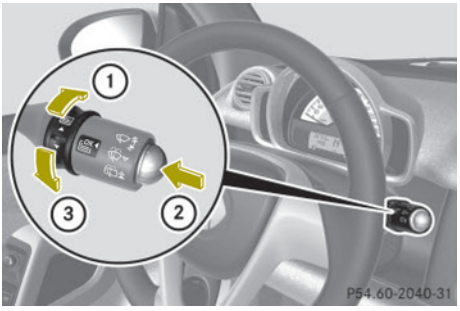

①	**Control switch** Pressing up selects a menu.
②	**OK button** Confirming a selection. Scrolling through stored messages in the Messages menu
③	**Control switch** Pressing down selects a menu.

Multifunction display

The multifunction display shows values and settings as well as display messages.

- ▶ **Activating the multifunction display:** Unlock the vehicle.
- ▶ **Confirming messages:** Press the OK button on the control lever briefly (▷ page 83).
- ▶ **Exiting menu:** Press the control switch on the control lever up or down until the

message Back appears in the multifunction display.

▶ Press the OK button on the control lever briefly.

Transmission position indicator

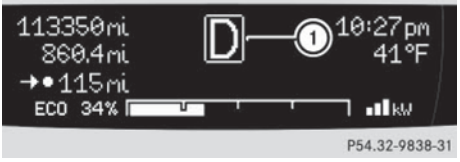

The transmission position indicator ① displays the current gear selector lever position.

Display	Function
P	Park position
R	Reverse gear
N	Neutral
D	Drive

Display	Function
N (flashes)	There is a parking lock malfunction. ▶ Move the gear selector lever slowly from position **P** to position **R** and back to position **P**. If **N** remains flashing in the multifunction display: ▶ Move the gear selector lever to position **P**. When leaving the vehicle, apply the parking brake to secure the vehicle from rolling away. ▶ Contact an authorized electric drive smart center.
0	▶ Move the gear selector lever to park position **P** or neutral position **N**. ▶ Turn the key to starter switch position **2** (▷ page 57) and hold it in position until READY appears in the multifunction display (▷ page 87).

Recuperation display*

The recuperation display shows you the current set recuperation level. You can set the recuperation level by using the steering wheel paddle shifters* (▷ page 79).

The following levels are available:

- no recuperation (level 0)
- moderate recuperation (level 1)
- high recuperation (level 2)

* optional

No recuperation (level 0)

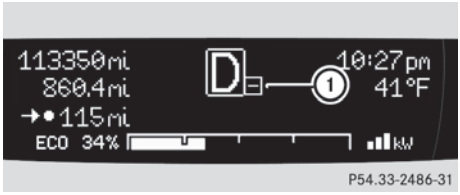

P54.33-2486-31

① Symbol for no recuperation

When this mode is set, there is no recuperation. When you release the accelerator pedal, the vehicle rolls on unbraked.

Use this mode in situations when driving without frequent braking, for example on highways.

Moderate recuperation (level 1)

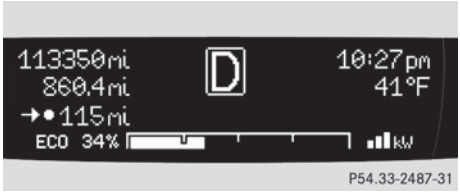

P54.33-2487-31

Moderate recuperation occurs when this mode is set. When you release the accelerator pedal, the vehicle is slightly braked. Gained kinetic energy is converted into electrical energy by the electric motor. This energy is stored in the high-voltage battery.

This mode is set as standard when starting the drive system.

Use this mode in situations of well-balanced relationship between accelerating and braking, for example on cross-country rides.

High recuperation (level 2)

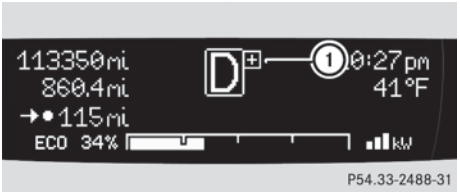

P54.33-2488-31

① Symbol for high recuperation

High recuperation occurs when this mode is set. When you release the accelerator pedal, the vehicle is deeply braked. Energy conversion of kinetic energy to electrical energy is most effective in this mode.

Use this mode in situations in which you need to brake frequently, for example while driving stop-and-go in city traffic.

Maximum available power

WARNING

When the indicator for the maximum available power is not at its maximal range, the power output is reduced noticeably. Adapt your speed and driving accordingly. Otherwise, you could cause an accident. Exercise particular care when passing or accelerating.

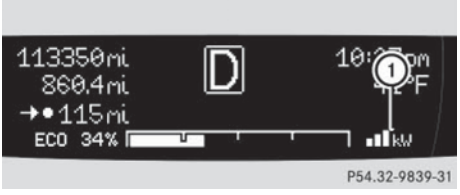

P54.32-9839-31

The indicator for the maximum available power of the drive system contains three segments ①. The number of dark segments indicates power that is currently available.

- Three segments: maximum power is available.
- Two segments: Less than 66 % amount of power is available.
- One segment: Less than 33 % amount of power is available.

Under normal operating conditions the indicator for the maximum power is at the maximum range ①.

The available amount of power can vary from the the maximum range due to:

- very high or low outside temperatures
- very high power demand over a long time period
- very low charge level of the high-voltage battery

By charging the high-voltage battery, the reduced availability of power can be improved (▷ page 114).

ECO indicator

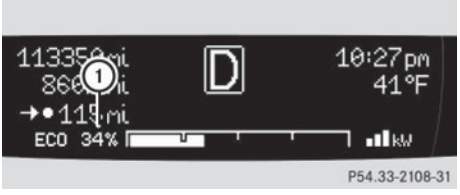

ECO indicator ① helps you to optimize your driving style. The energy consumption of your vehicle can be reduced and the cruising range can be increased.

The calculated ECO value in percent indicates if and how your driving style differs from an ideal driving style (100 %).

It is calculated from the dynamic factors

- acceleration
- braking behavior
- constant driving

Feedback is provided by:

- your driving style when accelerating and coasting
  - If you accelerate evenly and moderately, the ECO value increases. If you accelerate hard, the ECO value decreases.
  - Anticipatory, constant driving and coasting without sudden braking increases the ECO value.
- the uniformity of your driving style
  - If you accelerate moderately, take your foot off the accelerator pedal early and avoid frequent braking, your driving style is constant and uniform. Thus, the ECO value increases.

The ECO indicator summarizes the driving characteristics from the start of the journey to its completion. For this reason, it changes dynamically at the beginning of the journey.

After a prolonged standstill of the vehicle, ECO indicator display ① always starts at a value of 50 %.

Resetting the ➥START menu (▷ page 90), sets the value of the ECO indicator back to 50 %.

The ECO-value is displayed:

- while driving
- if the key is in starter switch position **2**.

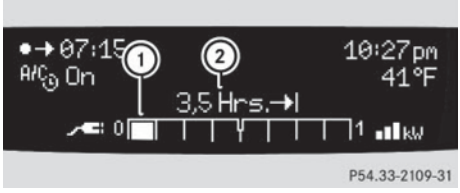

In place of the ECO display, battery charge level ① and charging time ② appear , if:

- the high-voltage battery is being charged
- the key is in starter switch position **1**.

READY indicator

READY appears for two seconds in the multifunction display, if:

- the key is turned to starter switch position **2**
- there is no malfunction in the drive system

The vehicle is ready to drive.

Charging mode display

When you switch off the ignition, you see the display of the charging mode which is currently set.

The charging mode is not changed after the ignition has been switched off.

If the multifunction display has already gone out, you must turn the key to starter switch position **1**. Afterwards, you can change the setting in the Charge and Depart menu (▷ page 90).

If you do not make a change, the last selected entry is activated. If you have not made any departure time settings in the last 24 hours, the Instant Charge menu is activated.

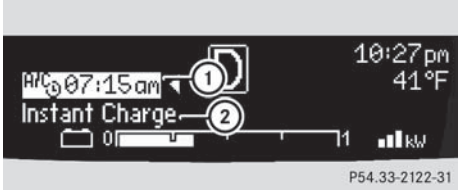

Example illustration: Departure time selected

① Preset departure time

② Instant Charge menu

▶ **To change the setting:** press and hold the control switch on the control lever up or down until the desired mode is selected in the multifunction display (▷ page 83).

Additional information:

- Setting the departure time (▷ page 90)
- Starting the charging process immediately (▷ page 92)

Outside temperature

WARNING

The outside temperature display is not designed as an ice-warning device and is therefore unsuitable for that purpose.

Indicated temperatures just above the freezing point do not guarantee that the road surface is free of ice. The road may still be icy, especially in wooded areas or on bridges. Your vehicle could start to skid if you do not adjust your driving style accordingly.

Therefore, always adjust your driving style to the prevailing road and weather conditions.

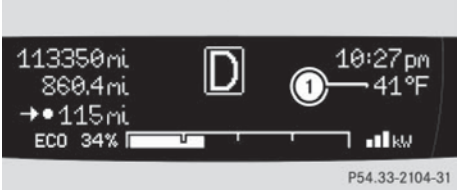

Example illustration (U.S. vehicles)

Canada vehicles: The outside temperature display shows °C instead of °F.

The outside temperature display ① appears in the multifunction display continuously.

A change of the outside temperature will be displayed with delay.

Freeze warning (Canada vehicles only)

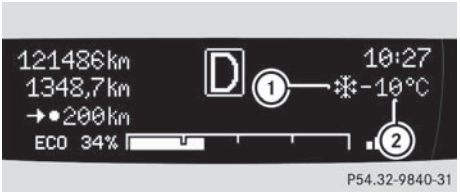

When the outside temperature falls below 3°C, the multifunction display makes you aware of the fact that the road may be icy. An additional freeze warning, i.e. an ice crystal symbol ①, in the multifunction display flashes. After 60 seconds, the freeze warning stops flashing but continues to be displayed. When the outside temperature rises above 3°C, the freeze warning goes out.

A change of the outside temperature ② will be displayed with delay.

Menus and submenus

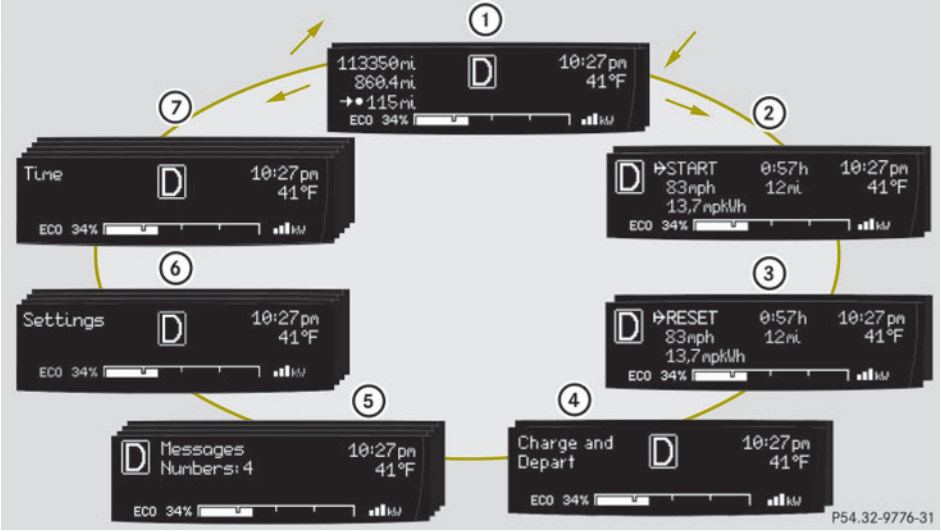

	Function
①	Odometer menu (▷ page 89)
②	→START menu (trip statistics since start) (▷ page 90)
③	→RESET menu (trip statistics since last reset) (▷ page 90)
④	Charge and depart menu (▷ page 90)
⑤	Messages menu (▷ page 93)
⑥	Settings menu (▷ page 93)
⑦	Time menu (▷ page 94)

Odometer menu

The Odometer menu shows you either the main odometer and the trip odometer or the trip odometer with the remaining cruise range.

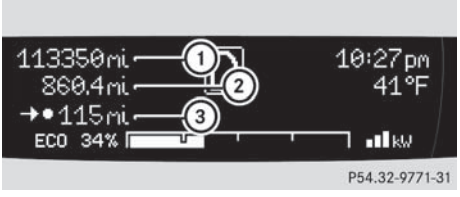

① Main odometer
② Trip odometer
③ Remaining cruise range

▶ Press the control switch on the control lever (▷ page 83) up or down until the

Odometer menu appears in the multifunction display.

- ▶ **To switch between submenus:** Press the OK button on the control lever briefly.
- ▶ **To reset the trip odometer:** Select the trip odometer display.
- ▶ Press button ⑥ on the instrument cluster until the trip odometer is reset to 0 (▷ page 23).

If the remaining cruise range of the charge level of the high-voltage battery has dropped below 10 %, Low Battery is displayed on position ③.

Start menu

The ➥START menu shows you the trip statistics since start.

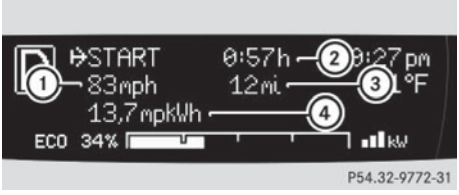

P54.32-9772-31

① Average speed since start
② Time elapsed since start
③ Distance driven since start
④ Average energy consumption

- ▶ Press the control switch on the control lever (▷ page 83) up or down until the ➥START menu appears in the multifunction display.
- ▶ **To reset:** Press button ⑥ on the instrument cluster until the ➥START menu is reset to **0** (▷ page 23).

ⓘ The ➥START menu is reset to 0 automatically

- when the ignition has been switched off for more than 4 hours
- after driving more than 9999 miles or kilometers

Reset menu

The ➥RESET menu menu shows you the trip statistics since the last reset.

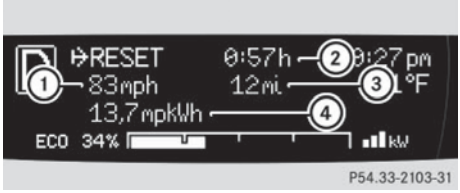

P54.33-2103-31

① Average speed since last reset
② Time elapsed since since last reset
③ Distance driven since last reset
④ Average energy consumption

- ▶ Press the control switch on the control lever (▷ page 83) up or down until the ➥RESET menu appears in the multifunction display.
- ▶ **To reset:** Press button ⑥ on the instrument cluster until the ➥RESET menu is reset to **0** (▷ page 23).

Charge and depart menu

In the Charge and Depart menu you can change the following settings:

- set a departure time
- switch on/off the "Air conditioning before start" function
- instant charge of the high-voltage battery
- set the maximum charge current.

- ▶ Press the control switch on the control lever up or down until Charge and Depart appears in the multifunction display.
- ▶ Press the OK button on the control lever briefly.

Setting the departure time

With this function, you can preset a departure time.

This is useful:

- if you wish to cool the interior of the vehicle before driving
- if you wish to charge the vehicle at a charging station/wallbox at the most inexpensive electricity rate

With the "Air conditioning before start" function, the vehicle interior is cooled prior to a desired departure time.

Prerequisites:

- The doors and tailgate are closed.
- The charging cable for the high-voltage battery is connected to a power source and inserted into the vehicle's power socket.
- The high-voltage battery has a sufficient charge.

The maximum duration of "Air conditioning before start" is 30 minutes.

Set the air distribution of your vehicle as follows so that the "Air conditioning before start" function has the greatest effect:

- in summer, to the center and side vents
- in winter, onto the windshield and side windows

Information on air distribution can be found on (▷ page 102).

The setting of the airflow regulator has no influence on the "Air conditioning before start" function.

If the programmed time is too short, the high-voltage battery cannot be completely charged. After setting the departure time, the maximum charge level which can be reached is then shown.

If the high-voltage battery is not sufficiently charged and the "Air conditioning before start" function is activated, the high-voltage battery is charged first. When a charge level of at least 20 % has been reached, the "Air conditioning before start" function is activated. This function then has priority over the charging of the high-voltage battery.

Activating the set departure time

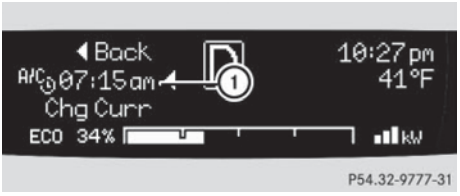

▶ Press and hold the control switch on the control lever up or down until the display of the last set departure time ① appears in the multifunction display.

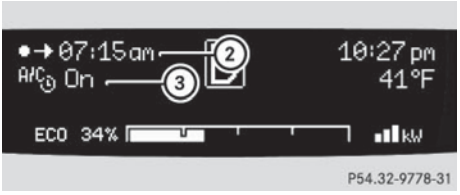

▶ Briefly press the OK button on the control lever.
The departure time is activated ②. The setting for the "Air conditioning before start" function ③ is stored.

Changing the set departure time

▶ Press and hold the control switch on the control lever up or down until the Overwrite menu appears in the multifunction display.

▶ Briefly press the OK button on the control lever.

▶ If the 12-hour mode is set:
press and hold the control switch on the control lever up or down until the desired mode (am oder pm) is selected.

▶ Briefly press the OK button on the control lever.

▶ Press and hold the control switch on the control lever up or down until the desired hour is selected.

- ▶ Briefly press the OK button on the control lever.
- ▶ Press and hold the control switch on the control lever up or down until the "Air conditioning before start" function is activated or deactivated.
- ▶ Briefly press the OK button on the control lever.
- ▶ Press and hold the control switch on the control lever up or down until the "Air conditioning before start" function is activated or deactivated.
- ▶ Briefly press the OK button on the control lever.
  The new departure time is stored and activated.
  The "Air conditioning before start" function is activated or deactivated.

Starting the charging process of the high-voltage battery immediately

This function allows you to start the charging process immediately. The charging process begins as soon as the charging cable is connected.

ⓘ The charging process also begins when you insert the charging cable into the vehicle's power socket. However, this is only the case if you have not made any departure time settings.
Information on the charging process can be found on (▷ page 115).

- ▶ Press and hold the control switch on the control lever up or down until the Instant Charge menu appears in the multifunction display.
- ▶ Briefly press the OK button on the control lever.
  The charging process is started as soon as the charging cable is connected.

ⓘ When you call up the Instant Charge menu, the "Air conditioning before start" function is not available.

Setting the maximum charge current

⚠ WARNING

When connected to a power supply socket, a high electrical load during the charging process can lead to overheating of the external power supply. There is a risk of fire.

Check the maximum permissible charge current on site before you begin the charging process. Contact an authorized electric drive smart center should you require assistance. If necessary, adjust the settings of your vehicle.

You can limit the charge current of the high-voltage battery. This can protect the power supply from overloading. You can set the limit either on the control unit of the charging cable or via the control system.

The preset standard value is "Max". This corresponds to the maximum available charge current of the power supply.

Check the maximum permissible charge current for the respective power supply socket before charging the high-voltage battery.

The following values are available for selection: 8 A, 12 A, Max. The last value set remains stored until a change is made.

- ▶ Press and hold the control switch on the control lever up or down until the Charge Current menu appears in the multifunction display.
- ▶ Briefly press the OK button on the control lever.
- ▶ Press and hold the control switch on the control lever up or down until the desired amperage is selected.
- ▶ Briefly press the OK button on the control lever.
  The selected amperage is set.

ⓘ If differing values are set on the charging cable and the control system, the high-voltage battery is charged using the lowest value.

If the vehicle needs more time to charge the high-voltage battery than usual, check the settings of the maximum permissible charge current.

Messages menu

The Messages menu stores messages that you can call up.

When no messages have been stored, the Messages menu is not displayed.

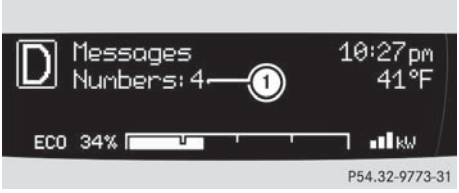

P54.32-9773-31

- Press the control switch on the control lever (▷ page 83) up or down until the Messages menu appears in the multifunction display.
  The number of stored messages is ① displayed
- Press the OK button on the control lever briefly.
  The first stored message appears.
- **To scroll through messages:** Press the OK button on the control lever briefly.

For more information on display messages, see (▷ page 161).

Maintenance service interval display

The maintenance service interval display will notify you when the next maintenance service is due and what type of maintenance service is required.

Example:

- Main Service in XXX mi
- Main Service in XX Days

- **To confirm:** Press the OK button on the control lever briefly.
  The mesage is stored.

When the due date for the maintenance service has been has been passed, the number of miles (kilometers) or days since are preceeded by a minus sign.

Failure to have the maintenance service performed at the designated times/mileage, may result in vehicle damage that is not covered by the smart Limited Warranty.

Settings menu

In the Settings menu, you can select individual settings for your vehicle.

The following functions are available:

- Setting the language
- Setting the temperature unit
- Setting the distance and speed unit

- Press the control switch on the control lever (▷ page 83) up or down until the Settings menu appears in the multifunction display.
- Press the OK button on the control lever briefly.

Setting the language

The following languages are available:

- German
- US English
- UK English
- French
- Italian
- Spanish

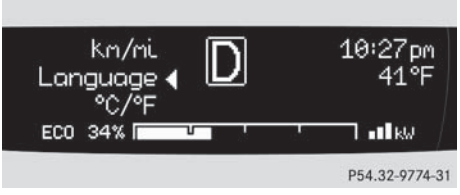

P54.32-9774-31

- Press the control switch on the control lever (▷ page 83) up or down until the

Language submenu appears in the multifunction display.

▶ Press the OK button on the control lever briefly.

▶ Press the control switch on the control lever (▷ page 83) up or down until the desired language is selected.

▶ Press the OK button on the control lever briefly to confirm.
The selected language is stored.

Setting the temperature unit

The following units are available:

- °C
- °F

▶ Press the control switch on the control lever (▷ page 83) up or down until the °F/°C submenu appears in the multifunction display.

▶ Press the OK button on the control lever briefly.

▶ Press the control switch on the control lever (▷ page 83) up or down until the desired unit is selected.

▶ Press the OK button on the control lever briefly to confirm.
The selected unit is stored.

Setting the distance and speed unit

The following units are available:

- Miles (mi)
- Kilometers (km)

▶ Press the control switch on the control lever (▷ page 83) up or down until the mi-km submenu appears in the multifunction display.

▶ Press the OK button on the control lever briefly.

▶ Press the control switch on the control lever (▷ page 83) up or down until the desired unit is selected.

▶ Press the OK button on the control lever briefly to confirm.
The selected unit is stored.

Canada only: The unit for the cruise control (▷ page 97) does not change, regardless of which unit is set in this menu.

Time menu

The Time menu lets you set the time and offers different display modes.

The following submenus are available:

- Setting time display mode (12-hour or 24-hour mode)
- Setting period of day, am or pm[5]
- Setting the hours
- Setting the minutes

▶ Press the control switch on the control lever (▷ page 83) up or down until the Time menu appears in the multifunction display.

▶ Press the OK button on the control lever briefly.

Setting the time display mode

▶ Press the control switch on the control lever (▷ page 83) up or down until the 12h 24h submenu appears in the multifunction display.

▶ Press the OK button on the control lever briefly.

▶ Press the control switch on the control lever (▷ page 83) up or down until the desired setting is selected.

▶ Press the OK button on the control lever briefly to confirm.
The selected mode is stored.

[5] Only available in 12-hour mode.

Setting the period of day

- ▶ Press the control switch on the control lever (▷ page 83) up or down until the am pm submenu appears in the multifunction display.
- ▶ Press the OK button on the control lever briefly.
- ▶ Press the control switch on the control lever (▷ page 83) up or down until the desired setting is selected.
- ▶ Press the OK button on the control lever briefly to confirm.
  The selected mode is stored.

Setting the hours

- ▶ Press the control switch on the control lever (▷ page 83) up or down until the Hour submenu appears in the multifunction display.
- ▶ Press the OK button on the control lever briefly.
- ▶ Press the control switch on the control lever (▷ page 83) up or down until the desired setting is selected.
- ▶ Press the OK button on the control lever briefly to confirm.
  The selected hours are stored.

Setting the minutes

- ▶ Press the control switch on the control lever (▷ page 83) up or down until the Minute submenu appears in the multifunction display.
- ▶ Press the OK button on the control lever briefly.
- ▶ Press the control switch on the control lever (▷ page 83) up or down until the desired setting is selected.
- ▶ Press the OK button on the control lever briefly to confirm.
  The selected minutes are stored.

Audio system*

⚠ WARNING

In order to avoid distraction which could lead to an accident, the driver should enter system settings with the vehicle at a standstill and operate the system only when road and traffic conditions permit. Always pay full attention to traffic conditions first before operating system controls while driving.

Bear in mind that at a speed of just 30 mph (approximately 50 km/h), your vehicle is covering a distance of 44 feet (approximately 14 m) every second.

⚠ WARNING

Always select a volume that allows you to still hear ambient sound in your immediate vicinity (e.g. horns, emergency rescue vehicles, police vehicles, etc.). You could otherwise cause an accident.

⚠ WARNING

If you wish to have an audio system other than an original smart audio system fitted in your vehicle, please always have the necessary work performed at an authorized smart center.

This is particularly important if your vehicle is fitted with a radio preinstallation. Improper connection can result in the failure of important vehicle functions, thereby endangering the operating safety of your vehicle and thus your own safety and that of other people.

The following pages contain a brief description of the audio systems available for the coupé and cabriolet.

The devices are described with their full complement of equipment. The description for your individual equipment specification applies.

Please refer to the separate operating instructions for detailed functions.

* optional

Audio system basic

The audio system basic contains the following functions:

- Radio (FM/AM)
- Radio Broadcast Data System (RBDS) and radio text
- AUX and USB socket (▷ page 96)

! Please be sure to read the operating instructions for the audio system basic before using the unit. Familiarize yourself with the various functions of the unit so that you are able to operate it easily, reliably and correctly at any time.

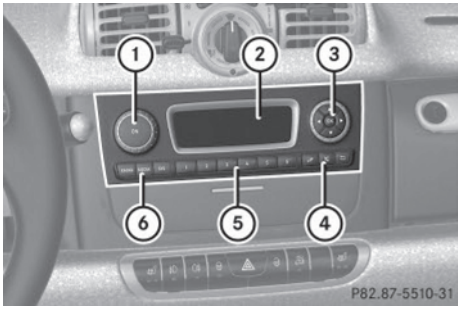

① On/off and volume switch
② Display
③ Skip/Scroll/Frequency search switches
④ Tone settings/Mute/Back control panel
⑤ Stored station buttons
⑥ Radio/Media/System control panel

Audio system navigation/multimedia*

The audio system navigation/multimedia contains the following functions:

- Radio (FM/AM)
- Radio Broadcast Data System (RBDS)
- AUX and USB-socket
- Bluetooth® hands-free device
- Navigation
- Audio operation from CD/DVD or SD Card, via AUX/USB/iPod®, or Bluetooth® Audio
- Video operation from CD/DVD or SD Card, via AUX/USB/iPod®
- Image display from CD/DVD or SD Card, via USB/iPod®

! Please be sure to read the operating instructions for the audio system navigation/multimedia before using the unit. Familiarize yourself with the various functions of the unit so that you are able to operate it easily, reliably and correctly at any time.

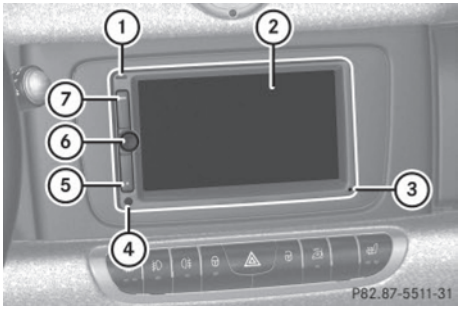

① Bluetooth® connection indicator lamp
② Display
③ Microphone
④ Light sensor
⑤ Eject button
⑥ Rotary/Push button
⑦ Menu button

AUX and USB sockets

You can connect mobile audio devices such as an MP3 player via the AUX and USB sockets using commercially available 3.5 mm socket plug (AUX) or USB connector cable (USB).

The AUX and USB sockets are located in the glove box.

* optional

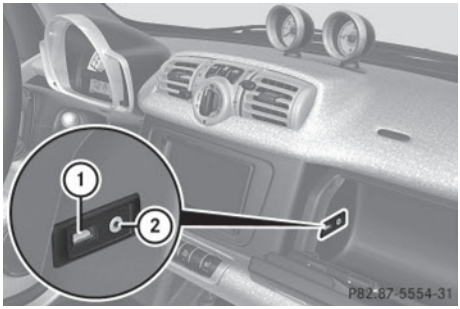

① USB socket

② AUX socket

smart surround sound system*

The smart surround sound system supplements the existing speakers with more powerful and additional speakers (including a digital amplifier in the passenger footwell and a passive subwoofer).

Driving systems

Cruise control*

The cruise control maintains the speed you set for your vehicle automatically. On downhill grades, the cruise control does not brake the vehicle via the brake system. The cruise control can only use the braking power of the engine. You must apply the brakes yourself in order to reduce the vehicle speed. The cruise control will then be canceled.

⚠ WARNING

The cruise control is a convenience system designed to assist the driver during vehicle operation. The cruise control cannot take road, traffic, and weather conditions into account. The driver is and must always remain responsible for the vehicle's speed and for safe brake operation.

Do not use the cruise control

- if the road, traffic, and weather conditions do not make it advisable to travel at a constant speed
- on slippery roads

  Rapid changes in tire traction can result in wheel spin and loss of control.
- when driving in fog

The use of the cruise control is recommended for driving at a constant speed for extended periods of time.

With the cruise control is activated and a speed set, the following message appears in the multifunction display:

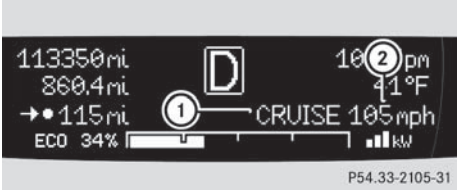

U.S. vehicles

① Cruise control activated

② Set speed

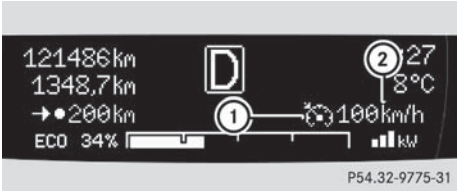

Canada vehicles

① Cruise control activated

② Set speed

The cruise control is operated via buttons on the steering wheel.

* optional

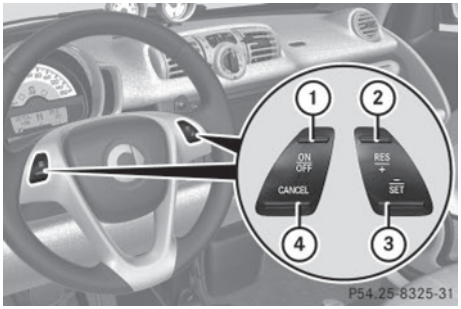

① Activating or deactivating the cruise control

② Resuming at last set speed or increasing speed

③ Setting current or lower speed, or decreasing speed

④ Canceling the cruise control

Activating/deactivating

The cruise control must be activated before you can set a speed. When you switch off the drive system, the cruise control is deactivated automatically.

▶ Press ON/OFF button ① briefly.
The cruise control is activated.
CRUISE (USA only) or [⛐] (Canada only) appears in the multifunction display.

Setting current speed

You can set any speed above 20 mph (30 km/h).

▶ Accelerate the vehicle to the desired speed.

▶ With the cruise control activated, press SET/− button ③ briefly.

▶ Remove your foot from the accelerator pedal.
The current speed is set and the vehicle maintains that speed.
USA only: set appears in the multifunction display to indicate that the speed has been set.
Canada only: The set speed appears in the multifunction display next to cruise control symbol [⛐].

ⓘ On uphill grades, the cruise control may not be able to maintain the set speed. Once the grade eases, the set speed will be resumed.
On downhill grades, the cruise control can only maintain the set speed using the drive systems braking power. You must apply the brakes yourself when the vehicle does not slow down sufficiently. This will cancel the cruise control.

Canceling cruise control

When the cruise control is activated, you can cancel it at any time and resume the set speed later.

▶ Press CANCEL button ④ briefly.

or

▶ Depress the brake pedal.
The cruise control is canceled.

The cruise control deactivates automatically, when

- you engage the parking brake
- the vehicle speed is below 20 mphh (30 km/h)
- ESP® is in operation.

Resuming last set speed

⚠ **WARNING**

The "Resume" function should only be operated if the driver is fully aware of the previously set speed and wishes to resume this particular preset speed.

The set speed stored in memory should only be set again if prevailing road conditions and legal speed limits permit. Possible acceleration or deceleration differences arising from returning to the preset speed could cause an accident and/or serious injury to you and others.

▶ Press RES/+ button ② briefly.
The cruise control resumes the previously set speed.

ⓘ The last set speed stored in memory is deleted when the drive system is switched off.

Changing the set speed

You must have set a speed prior to increasing or decreasing the current speed.

ⓘ Depressing the accelerator pedal does not deactivate the cruise control. After a brief acceleration (e.g. for passing), the cruise control will resume the last set speed.

Continuous adjustment

▶ Press and hold RES/+ button ② to increase the speed.

or

▶ Press and hold SET/– ③ to decrease the speed.

▶ Press and hold the respective button until the desired speed is reached.

▶ Release the respective button.
The new speed is stored.

Adjustment in 1 mph (Canada 1 km/h) increments

▶ Press RES/+ button ② briefly to increase the speed.

or

▶ Press SET/– ③ briefly to decrease the speed.

The new speed is stored after releasing the respective button.

Air conditioning with climate control

Notes

⚠ **WARNING**
Follow the recommended settings for heating and cooling given on the following pages. Otherwise the windows could fog up, impairing visibility and endangering you and others.

The air conditioning improves the level of comfort when driving at high outside temperatures by cooling and dehumidifying the air.

Nearly all dust particles, pollutants, are filtered out by an integrated particle filter before outside air enters the passenger compartment through the air distribution system. It also operates when the air conditioning is switched off and you have switched on the blower.

The dehumidification of the air by the air conditioner prevents the windows from misting up when the outside air humidity is high.

This effect can also be used to defrost the windows. For this, make sure, in addition to the air conditioner, that the heater is on the maximum setting.

The air conditioner only works when:

- the ignition is switched on
- the blower is switched on
- the driver's door is closed

Maximum effectiveness is achieved if you drive with the windows closed.

If the operating temperature of the high-voltage battery is too high, the high-voltage battery is cooled by the air conditioner. When the air conditioner switches on, the cooling output in the vehicle's interior is reduced as a result. The temperature in the vehicle's interior may rise briefly.

If the air conditioner is not switched on, the compressor of the air conditioner and the vehicle's cooling fan are switched on automatically. This cools the high-voltage battery but not the vehicle's interior. When the high-voltage battery reaches the nominal temperature again, the air conditioner switches off automatically.

The range of the vehicle is decreased when the air conditioner is switched on.

In warmer weather, ventilate the passenger compartment for a short period of time before utilizing the air conditioning.

Further information on the "Air conditioning before start" function can be found on (▷ page 90).

Control panel

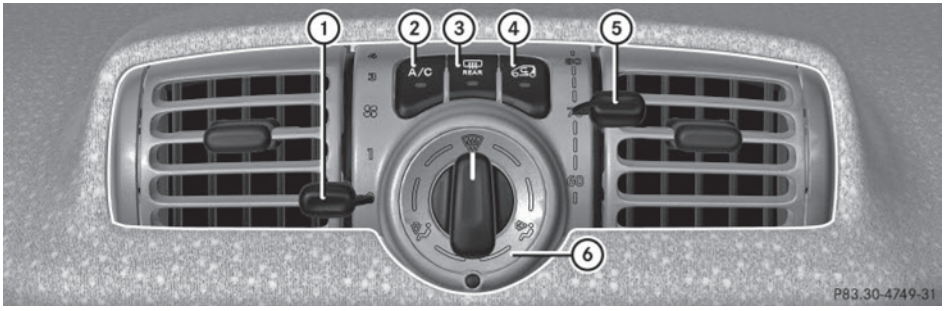

① Air volume control
② Air conditioning switch
③ Rear window defroster switch
④ Air recirculation switch
⑤ Temperature control
⑥ Air distribution control

Switching on/off

Control panel (▷ page 101).

- Make sure the ignition is switched on.
- **Switching on:** Push air volume control ① to level **1** or higher.
- Press air conditioning switch ②.
  The indicator lamp in air conditioning switch ② comes on.
- **Switching off:** Press air conditioning switch ② once more.
  The indicator lamp in air conditioning switch ② goes out.

The stored status is restored, if you switch on the ignition again.

Setting the temperature

Control panel (▷ page 101).

You should raise or lower the temperature setting in small increments, preferably starting at 70°F (21°C).

- **Increasing or decreasing:** Push temperature control ⑤ up or down.

Adjusting air vents

WARNING

When operating the heating or air conditioning with climate control, the air that enters the passenger compartment through the air vents can be very hot or very cold (depending on the set temperature). This may cause burns or frostbite on unprotected skin in the immediate area of the air vents. Always keep sufficient distance between unprotected parts of the body and the air vents. If necessary, use the air distribution control to direct the air to air vents in the vehicle interior that are not in the immediate area of unprotected skin.

To make sure the heating or air conditioning with climate control works properly, please observe the following:

- Keep the air intake grill free from deposits, e.g. ice or snow, to ensure that

fresh air can flow freely into the vehicle interior.

- Do not obstruct air vents or ventilation grilles in the vehicle interior.

For draft-free ventilation, move the sliders for the center air vents and side air vents to the middle position.

Center air vents

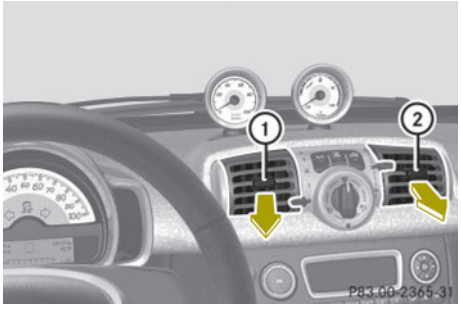

① Left center air vent, adjustable

② Right center air vent, adjustable

- **Adjusting:** Turn slider ① or ② to the left, right, up, or down.
- **Opening:** Turn slider ① or ② inwards towards the center console.
- **Closing:** Turn slider ① or ② fully outwards towards the side window.

Side air vents

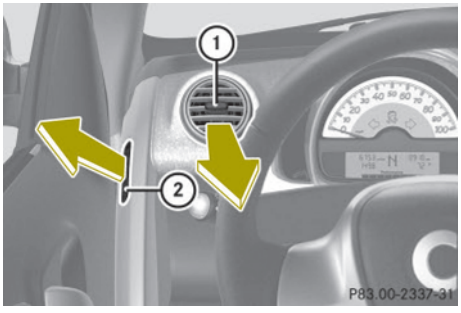

Side air vents on driver's side illustrated as example

① Left side air vent, adjustable

② Left side defroster air vent, fixed

- **Adjusting:** Turn slider ① to the left, right, up, or down.
- **Opening:** Turn slider ① inwards towards the center console.
- **Closing:** Turn slider ① fully outwards towards the side window.

Adjusting air distribution

Symbol	Function
	Directs air to the windshield and side windows
	Directs air to the footwells and air distribution is reduced at the center and side air vents
	Directs air through the center and side air vents

You can also turn the air distribution control to a position between two symbols.

Control panel (▷ page 101).

- Turn air distribution control ⑥ to the desired symbol.
  The air distribution is controlled depending on the position of the air distribution control.

Adjusting air volume

The air volume is controlled depending on the blower speed selected. Five blower speeds are available.

0	Off
1	Slow
2	Medium
3	High/defrosting
4	Maximum

▶ **Increasing or decreasing:** Push air volume control ① up or down.

Defrosting

WARNING

Never drive with iced up or fogged windows. Visibility will be significantly impaired. Impaired visibility could endanger yourself and others. This may prevent you from observing the traffic conditions, thereby causing an accident.

The best defrosting of windows is achieved if the ice is completely removed from the windows manually with an ice scraper before driving off.

Also use the "Air conditioning before start" function (▷ page 90).

Control panel (▷ page 101).

▶ **Switching on:** Push air volume control ① to level **3**.

▶ Turn air distribution control ⑥ to position .

▶ Push temperature control ⑤ fully up.

Rear window defroster

The rear window defroster serves to de-ice the rear window quickly and clear the view if the rear window is fogged.

The rear window defroster uses a large amount of power. To keep battery drain to a minimum, switch off the rear window defroster as soon as the rear window is clear. The rear window defroster is automatically deactivated after approximately 10 minutes of operation.

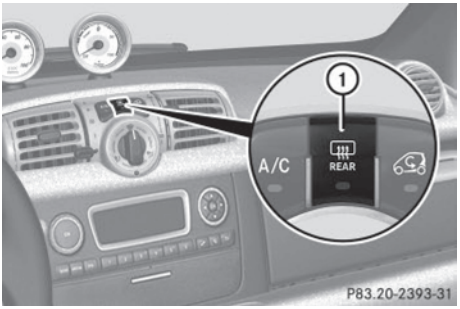

▶ Make sure the key is in starter switch position **1**.

▶ **Switching on:** Press rear window defroster switch ①.
The indicator lamp in rear window defroster switch ① comes on.

▶ **Switching off:** Press rear window defroster switch ① once more.
The indicator lamp in rear window defroster switch ① goes out.

Air recirculation mode

Switch to air recirculation mode to prevent unpleasant odors from entering the vehicle from the outside (e.g. before driving through a tunnel). This setting cuts off the intake of outside air and recirculates the air in the passenger compartment.

WARNING

When the air recirculation mode is switched on, windows can fog on the inside immediately. Fogged windows impair visibility, endangering you and others. If the windows begin to fog on the inside, switching off the air recirculation mode immediately should clear interior window fogging. If interior window fogging persists, make sure the air conditioning is switched on, turn air distribution control ⑥ to position and increase the air volume using air volume control ①.

Control panel (▷ page 101).

▶ **Switching on:** Press air recirculation switch ④.
The indicator lamp in air recirculation switch ④ comes on.

▶ **Switching off:** Press air recirculation switch ④ once more.
The indicator lamp in air recirculation switch ④ goes out.

Loading and storing

Cargo compartment cover blind with parcel net bag

⚠ WARNING

The cargo compartment cover blind is not intended to secure heavy objects in the event of an accident. For this reason, heavy objects must be tied down.

Vehicle occupants could be injured by objects being thrown around in the vehicle in the event of

- hard braking
- a change of direction
- an accident

⚠ WARNING

Do not place any objects on the mounted cargo compartment cover blind.

Vehicle occupants could be injured by objects being thrown around in the vehicle in the event of

- hard braking
- a change of direction
- an accident

⚠ WARNING

Only place light loads in the parcel net bag. Do not transport heavy, sharp-edged or fragile objects in the parcel net bag. The parcel net bag cannot sufficiently secure loads in an accident.

Vehicle occupants could be injured by objects being thrown around in the vehicle in the event of

- hard braking
- a change of direction
- an accident

Observe the loading guidelines.

The cargo compartment cover blind

- serves to protect objects that are stored in the vehicle's cargo compartment from prying eyes
- prevents smaller objects from penetrating into the passenger compartment from the cargo compartment; however, it is not intended to act as a load restraining device

The parcel net bag

- is for storing small, lightweight objects
- prevents small objects from sliding around inside the passenger compartment

! If objects are placed on the cargo compartment cover blind when mounted, the cover may be damaged.

Fitting

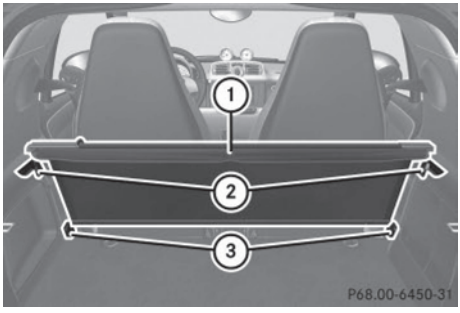

If you wish to use cargo compartment cover blind ① as normal, assemble it in top mountings ②. If you do not need the cargo compartment cover blind, insert in bottom mountings ③.

- Open the tailgate.
- Secure cargo compartment cover blind ① at the front of the cargo compartment with the parcel net bag.
- Insert cargo compartment cover blind ① on the right-hand side in top mounting ② or in bottom mounting ③.

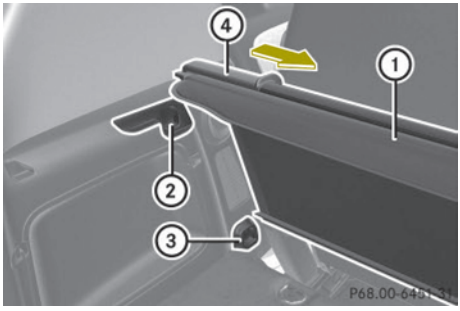

- Push handle ④ to the right in the direction of the arrow.
- Insert cargo compartment cover blind ① in top mounting ② or bottom mounting ③ in the left-hand side paneling and release handle ④.
- Cargo compartment cover blind ① engages.

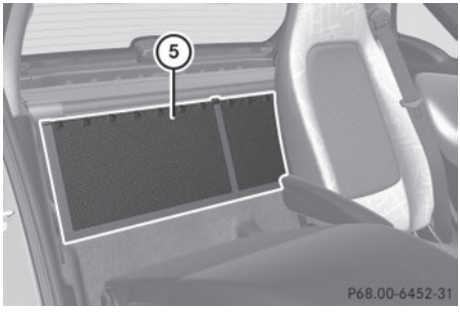

- Pull parcel net bag ⑤ down slightly and secure with the hook and loop fastener.
- Remove in reverse order.

Controls

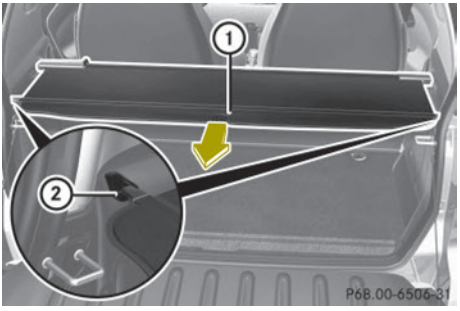

- **Closing:** Take hold of cargo compartment cover blind ① in the middle and pull backwards.
- Guide cargo compartment cover blind ① into the rear right and left mountings ②.
- **Opening:** Take hold of cargo compartment cover blind ① in the middle, pull backwards, and remove from rear mountings ②.
- Guide cargo compartment cover blind ① into position.

Coat hooks

The coat hooks are located at the rear roof rail on the driver's and passenger side.

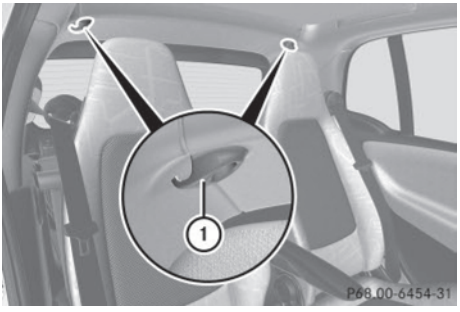

Coat hook on driver's side

① Coat hook

Storage compartments

WARNING

To help avoid personal injury during a collision or sudden maneuver, exercise care when storing objects in the vehicle. Put luggage or cargo in the cargo compartment if possible. Do not pile luggage or cargo higher than the seat backrests.

Keep compartment lids closed. This will help to prevent stored objects from being thrown about and injuring vehicle occupants during

- hard braking
- a change of direction
- an accident

Do not store objects under the driver's seat. Objects stored under the driver's seat can slide forward into driver's foot well during braking and get caught between or beneath the pedals. This could restrict your ability to brake or accelerate and could lead to accidents and injury.

Coin holder

The coin holder is located in front of the gear selector lever.

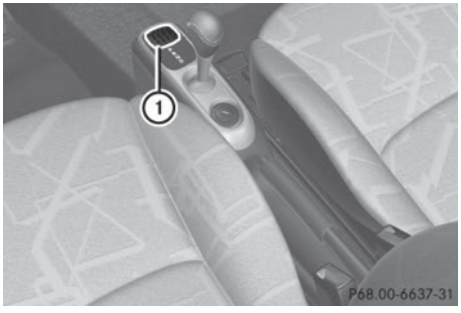

Example illustration (coupé)

① Coin holder

Door pockets

The door pockets are located in the driver's and passenger door.

① Door pocket

Storage trays next to the steering wheel

The storage trays are located to the left and right of the steering wheel.

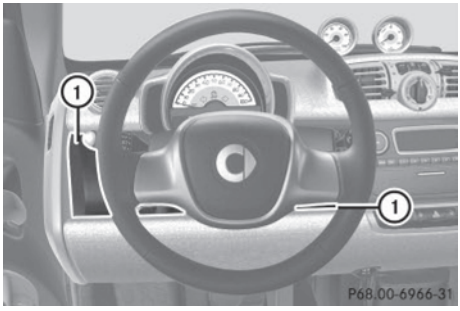

① Storage tray

Glove box

A clamp rail for slips of paper is located on the outside of the glove box lid.

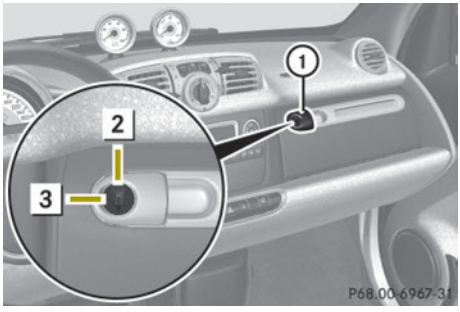

- ▶ **Opening:** Pull on glove box lid release ① and fold down the glove box lid.
- ▶ **Closing:** Lift up the glove box lid with a bit of force until it engages.
- ▶ **Locking:** Insert the key into the glove box lock and turn it to position 3.
- ▶ **Unlocking:** Insert the key into the glove box lock and turn it to position 2.

Storage tray* in center console

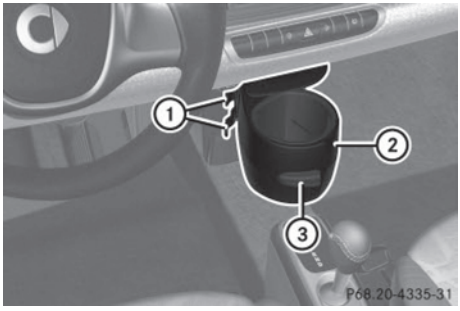

- ▶ **Installing:** Slide storage tray ② onto the cones on the center console until it engages audibly.
- ▶ **Removing:** Press levers ① simultaneously towards the storage tray.
- ▶ Pull storage tray ② away from the center console.
- ▶ **Opening:** Pull handle ③.
- ▶ **Closing:** Swivel storage tray ② back until it engages.

Parcel nets

Parcel nets are located on the in-board sides of the seat backrests.

ⓘ Vehicles equipped with an armrest* on the driver's seat, have a parcel net on the passenger seat only.

ⓘ Each parcel net is intended for lightweight items of below 0.9 lb (0.4 kg).

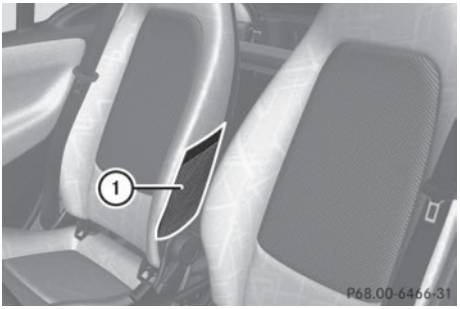

Example illustration: Parcel net on passenger seat

① Parcel net

Drawer

A drawer is located below the audio system.

- ▶ **Opening:** Press on the center of drawer ①.
  The drawer opens slightly.
- ▶ Pull drawer① to open completely.
- ▶ **Closing:** Press on drawer ① until it engages.

Storage compartment in the tailgate (coupé only)

If possible, you can stow the charging cable in the storage compartment of the tailgate (▷ page 115).

❗ Do not place the charging cable in the compartment for the roof bars of the roof system. If the charging cable is placed there, the roof bars can be damaged when the storage compartment is closed. For

* optional

this reason, please make sure that the charging cable is only stowed in the intended location.

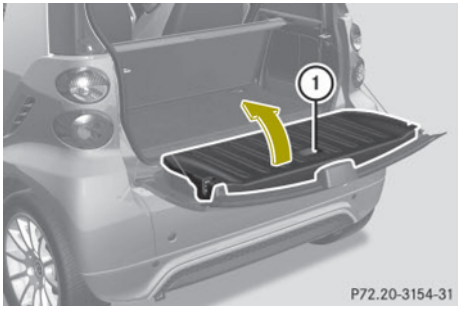

- ▶ **Opening:** Open the tailgates.
- ▶ Pull handle ① on the inside of the tailgate backward.
- ▶ Lift up the storage compartment cover.
- ▶ **Closing:** Close storage compartment cover ①.
- ▶ Press on the "PRESS" marking in the middle of storage compartment cover ① until it engages audibly.
- ▶ Close the tailgates (▷ page 55).

Loading instructions

⚠ WARNING

Transport heavy or hard objects in the cargo compartment, not in the passenger compartment.

Always fasten items being carried as securely as possible using fastening materials appropriate for the weight and size of the load.

In an accident, during hard braking or sudden maneuvers, loose items may be thrown around inside the vehicle, causing injury to vehicle occupants.

⚠ WARNING

To help avoid personal injury during a collision or sudden maneuver, exercise care when storing objects in the vehicle. Put luggage or cargo in the cargo compartment if possible. Do not pile luggage or cargo higher than the seat backrests.

Keep compartment lids closed. This will help to prevent stored objects from being thrown about and injuring vehicle occupants during

- braking
- vehicle maneuvers
- an accident

⚠ WARNING

No racks or loads may be secured to the roof of the vehicle, as

- the panorama roof* may be damaged, thus injuring persons
- this can have a substantial adverse effect on the driving dynamics of the vehicle, thus causing accidents
- the rack and/or the load could detach and through this cause an accident or other people could be injured by the load and/or rack that has fallen off

⚠ WARNING

Do not store any flammable substances inside the vehicle that could ignite and start a fire.

⚠ WARNING

The manufacturer has not approved your vehicle for towing a trailer. A trailer can permanently impair driving safety.

The gross vehicle weight which is the weight of the vehicle including tools, installed accessories, passengers, and luggage/cargo must never exceed the load limit and the Gross Vehicle Weight Rating (GVWR) for your vehicle as specified on the placard located on the driver's door B-pillar (▷ page 214). In addition, the load must be distributed in such a way so that the weight on each axle never exceeds the Gross Axle Weight Rating (GAWR) for the front and rear axle. The GVWR and GAWR for your vehi-

* optional

cle are indicated on the certification label which can be found on the driver's door B-pillar.

For more information, see "Loading the vehicle" (▷ page 133).

The handling characteristics of a fully loaded vehicle depend greatly on the load distribution. It is therefore recommended to load the vehicle with the heaviest items being placed towards the front of the vehicle.

Please pay attention to and comply with the following instructions when loading the vehicle and transporting cargo:

- Always place items being carried against seat backrests, and fasten them as securely as possible.
- The heaviest portion of the cargo should always be kept as low as possible against seat backrests.
- Do not stack loads higher than the top edge of the head restraints.
- Make sure no luggage/cargo items can get above or next to the driver's and/or passenger seat into the passenger compartment.
- Make sure luggage/cargo is properly secured.
- Always use, if so equipped, cargo net* when transporting cargo.

Do not carry any unnecessary weight in the vehicle. This increases vehicle weight, which results in increased energy consumption.

Useful features

Sun visors

The sun visors protect you from sun glare while driving.

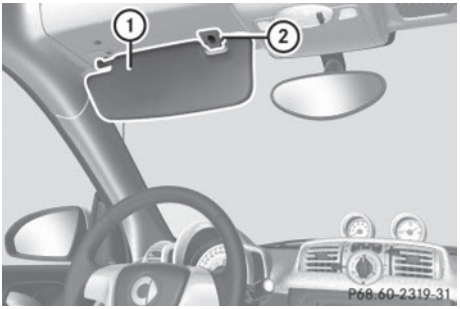

Glare through the windshield

▶ Swing sun visor ① down.

Glare through a side window

▶ Swing sun visor ① down.

▶ Disengage sun visor ① from mounting ②.

▶ Pivot sun visor ① to the side.

Sun screen*

The sun screen provides protection from sun rays and from heat generated by the panorama roof*.

The sun screen can be adjusted to any desired position.

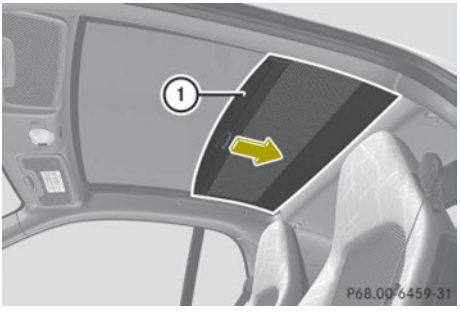

▶ **Opening or closing:** Move sun screen ① forward or backward using the handle.

* optional

Auxiliary power outlet

The auxiliary power outlet supplies power to the following electrical accessories when the key is turned to starter switch position **1**:

- the electric air pump, available in conjunction with the tire repair kit*
- other consumers which operate up to a maximum of 60 W

! The auxiliary power outlet can accommodate 12V DC electrical accessories designed for use with the standard "cigarette lighter" plug type.

Keep in mind, however, that connecting accessories to the auxiliary power outlet (for example extensive connecting and disconnecting, or using plugs that do not fit properly) can damage the auxiliary power outlet.

The auxiliary power outlet is located in the lower center console.

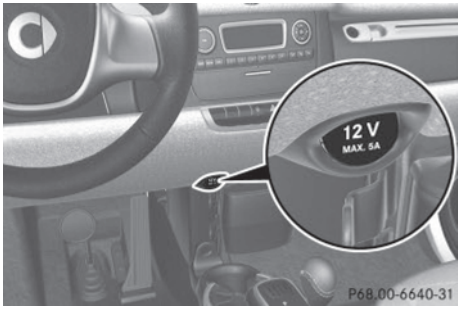

Auxiliary power outlet

▶ Turn the key to starter switch position **1**.

! Please observe the safety instructions given in the respective operating instructions.

Please note that

- if using the auxiliary power outlet the maximum current drawn may not exceed 5 A or 60 W
- the electric air pump* can be connected to the auxiliary power outlet for the time it takes to inflate the tire without any problem
- the vehicle battery will discharge when current is drawn.

* optional

High-voltage battery 112
Front compartment 123
Tires and wheels 127
Winter driving 146
Driving instructions 147
Driving abroad 153
Vehicle care 153

High-voltage battery

Introduction

P08.00-2007-31

The components of the drive system are indicated by yellow warning labels to make you aware of high voltage.

High-voltage cables are orange-colored.

WARNING

The drive system is subject to high voltages.

You may be seriously or even fatally injured if you:

- tamper with components or high-voltage cables in the drive system
- touch components or high-voltage cables in the drive system on a vehicle which has been involved in an accident
- touch damaged drive system components

Do not remove any drive system component covers which are marked with a warning sticker. Do not tamper with components or orange high-voltage drive system cables.

WARNING

The high-voltage battery of the drive system is located under the vehicle's underbody. When the pressure inside the high-voltage battery exceeds a certain value, for example in case of a vehicle fire, inflammable gas will escape via a duct. The inflammable gas escapes to an area under the vehicle. This prevents the high-voltage battery from exploding.

Stay away from this area of the vehicle.

The drive system is powered by a high-voltage battery. The high-voltage battery stores and releases the energy required for operation of the electric motor.

The electric motor uses the energy that is stored in the high-voltage battery when driving off and when accelerating.

When rolling, kinetic energy is converted into electrical energy by energy recovery and stored in the high-voltage battery.

The range of the vehicle is reduced when consumers are switched on, e.g. climate control.

The high-voltage battery can be charged in a voltage range from 100 V to 240 V.

The high-voltage battery can be charged

- through energy recovery while the vehicle is rolling or when braking
- Level 1 charging – 110 V / 120 V –

  A travel cord will be supplied with the vehicle. This charging cable can be plugged into commonly available 110 V / 120 V, 15 A power sources. This charging method will take longer to charge your vehicle than a dedicated level 2 charging source. Therefore it is not recommended as the primary method of charging.
- Level 2 charging – 220 V / 240 V –

  For the fastest possible charging time, a dedicated 220 V / 240 V, 20 A circuit is required. Local electrical code can vary from town to town. Therefore, it is highly recommended that this service is professionally installed. This service should be installed in a dry area with easy access to the passenger side of the vehicle. You will need to obtain a vehicle charge connector that can be wired directly to or plugged into the dedicated 220 V / 240 V service. Charge connectors will be available for purchase through your authorized electric drive smart center.
- Level 2 charging – Charging station

Use only charging cables which have been approved and recommended for the vehicle. Do **not** use:

- extension chords
- cable reels
- multiple sockets
- travel adapters

When possible, only charge the high-voltage battery when the charge level is below 80 %.

It is recommended to charge the high-voltage battery prior to reaching less than 20% state of charge.

Discharged high-voltage battery

When the high-voltage battery is completely discharged, the drive system is switched off. This protects the battery from exhaustive discharge.

By switching the ignition off and on again, the drive system can be briefly reactivated once. This allows you to park the vehicle safely.

Do not allow your vehicle to remain stationary for more than 14 days with a discharged, or nearly discharged, high-voltage battery. You can check the charge level with the charge level gauge (▷ page 81).

High or low outside temperatures

The efficiency of the high-voltage battery is temperature-dependent and decreases at high or low temperatures. Additionally, the electrolytes used can gel at very low temperatures.

You can check the maximum capacity available using the indicator in the multifunction display (▷ page 87).

Energy consumption and range

The available energy of the high-voltage battery is reduced by:

- low outside temperatures
- switching on electrical consumers

At low temperatures and after being parked for an extended period without charging, the physical properties of the high-voltage battery:

- can cause a significant reduction in the performance of the battery
- can lead to longer charging times

In extreme cases, you will not be able to start the vehicle. For this reason, always connect the charging cable or make sure the battery is completely charged when parking the vehicle in low outside temperatures or for an extended period of time.

Due to its physical properties, the capacity of a high-voltage battery decreases over its lifespan.

Thus, the following are reduced:

- the maximum attainable range of the vehicle
- the maximum performance output (acceleration) of the vehicle

You can actively contribute to the reduction of the vehicle's energy consumption by:

- driving conservatively
- maintaining the vehicle regularly
- decreasing the use of electrical consumers

Notes on battery care

Avoid storing and transporting the vehicle at high temperatures for extended periods of time (e. g. container transport).

When out of use for longer periods of time, connect the vehicle to a voltage supply.

If the vehicle is not connected to a voltage supply, it must remain within a tempera-

ture range from -4 °F (-20 °C) to 104 °F (40 °C) .

When the vehicle is exposed to temperatures below -13 °F (-25 °C) for longer than seven days, irreversible damage by frost can occur.

Terms of use

Observe the following notes:

- exclusions of the high-voltage battery terms of use in the battery rental contract
- exclusions and limitations in the warranty and guarantee documents, as well as in the Service Booklet
- maintenance notes for the high-voltage battery in the Service Booklet

Overvoltage protection

! Overvoltage in the on-board powersupply system can damage the vehicle.

The vehicle is therefore equipped with a protective device against overvoltage in the power supply system. This protective device can be activated in severe thunderstorms, for example, and lead to security systems being triggered. This function is used to protect the vehicle. Once the security system has been reactivated, the charging process continues automatically.

Reactivate the security system after it has been triggered. Otherwise the charging process will not continue. The high-voltage battery is not being charged, which may result in the vehicle not being ready to start.

If you have secured other devices using the same security system, they will also be deactivated after this is triggered. Make sure that these devices do function after reactivating the security system.

Charging cable and -connecter warming

Observe the safety notes on (▷ page 112).

Charging cable and -connecter can become warmed during charging process when connected to a power source.

This warming is caused by

- high charge currents
- charging time
- transfer resistances at the plug contacts
- resistances of the charging cable

If the infrastructure of the power supply system and charging cable are in good order, the charging cable and -connecter will only warm up within admissible threshold.

Damaged charging cable plug or its contacts may lead to warming above admissible threshold. In case of this, have the cable, respectively power socket, exchanged or disposed by a qualified electrician.

Charging at an AC power socket or a private wallbox

Charging at an AC power socket

⚠ **WARNING**

If you apply improperly installed power sockets or adapters, extension cables or similar to connect the charging cable to power sockets, this may cause fire or lead to electric shock. Risk of life!

In order to avoid the risk, please observe the following:

- Connect the charging cable only to power sockets which are
  - properly installed
  - approved by a qualified electrician
- For safety reasons only use charging cables which have been supplied and approved for the vehicle.
- Do not use a damaged charging cable.

- Do **not** use:
  - extension chords
  - cable reels
  - multiple sockets
- Do not use power socket adapters to connect the charging cable to the main socket. Only exception to charge the high-voltage battery of an electric vehicle would be an adapter which has been certified and approved by the manufacturer.
- Observe the manufacturer's safety instructions.

Charging at a private wallbox

WARNING

If you apply an improperly installed wallbox or adapter, extension cable or similar to connect the charging cable, this may cause fire or lead to electric shock. Risk of life!

In order to avoid the risk, please observe the following:

- Connect the charging cable only to a wallbox which is
  - properly installed
  - approved by a qualified electrician
- For safety reasons only use charging cables which have been certified and approved for the vehicle.
- Do not use a damaged charging cable.
- Do not extend the charging cable.
- Do not use power socket adapters.
- Observe the manufacturer's safety instructions.

Charging cable

WARNING

The drive system is under high voltage.

Only use the charging cable that is supplied with the vehicle or a wallbox charging cable . Only use these charging cables to charge the vehicle. Do not extend a charging cable. Do not use a charging cable if it is damaged.

You could otherwise suffer an electric shock and be seriously or even fatally injured.

When charging at a private wallbox or public charging station (level 2 charging), the charging cable is non-detachably connected to the wallbox or charging station.

Storing the charging cable

You can store the charging cable in the vehicle.

- cabrio:
  - in a box which is available as a separate accessory (part number A 451 810 00 80).
  - in the storage compartment in the tailgate, if available (▷ page 107).

    In this case, you can not stow the roof bars of the roof system there.
- coupé: in the storage compartment in the tailgate, if available (▷ page 107).

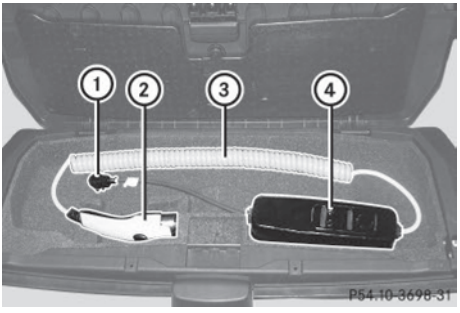

Storage compartment in the tailgate

▶ Hold charging cable connector ② in your left hand and power supply connector ① in your right hand.

▶ Lay spiral section ③ of the cable into the rear area of the storage compartment.

▶ Place the remainder of the charging cable into the recesses in the storage

compartment as shown in the illustration.

When doing so, observe that the display and buttons on control element ④ both point upwards.

Control element on the charging cable (Level 1)

⚠ WARNING

When connected to a power supply socket, a high electrical load during the charging process can lead to overheating of the external power supply. There is a risk of fire.

Check the maximum permissible charge current on site before you begin the charging process. Contact an authorized electric drive smart center should you require assistance. If necessary, adjust the settings of your vehicle.

! An excessive charge current can blow a fuse or lead to overheating of the external power supply. Check whether the external power supply is compatible with the set charge current. If necessary, lower the set charge current or use another power socket.

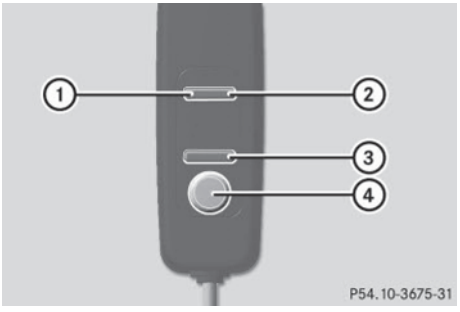

① AC status display
② Monitoring and safety system display
③ Charge current display
④ Set charge current button

If the lights on indicator lamps ① and ② light up, it means the following:

Indicator lamp ①	
lights up green	The connection to the external power supply is OK. The high-voltage battery can be charged.
flashes red	A malfunction is detected in the external power supply. The high-voltage battery will be charged when the current signal reaches a normal value.
lights up red	There is a malfunction. The charging cable must be unplugged from the power socket and plugged in again.

Indicator lamp ②	
lights up green	There is no malfunction. The high-voltage battery can be charged.
lights up red	The power supply on the control element is not permissible. The high-voltage battery cannot be charged.

i Information on problems during the charging process can be found on (▷ page 120).

▶ **To set the charge current:** press button ④ repeatedly until the desired setting is selected in display ③.

- An LED lights up: minimum setting
- All LEDs light up: maximum setting

i Depending on the country, the value of the maximum setting may vary.

If you leave the charging cable in the power supply socket after charging, the set value is used for the next charging process.

If you remove the charging cable from the power supply socket, the value is reset to the default value for the next charging process.

You can also set the maximum charge current via the control system (▷ page 92).

If differing values are set on the charging cable and the control system, the high-voltage battery is charged using the lowest value.

Charging the high-voltage battery

- Engage the parking brake.
- Move the gear selector lever to park position **P**.
- Switch off the ignition.

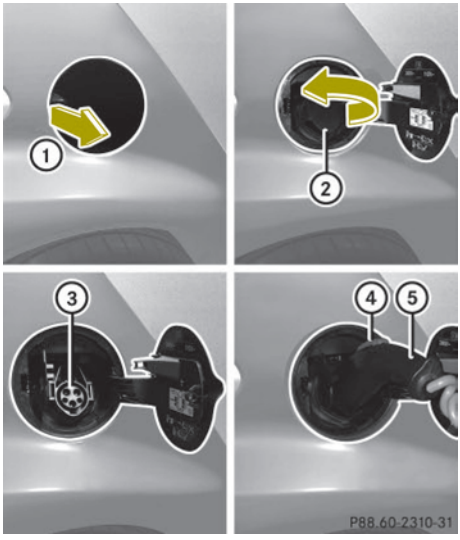

- Open charge socket flap ①.
- Remove cover ② from the charge socket.
- Insert the charging cable into the stationary connection, i.e. an AC power socket.
- Insert plug ⑤ of the charging cable into charge socket ③ to the stop.
  The high-voltage battery is being charged.

The vehicle must not be moved during charging.

The indicator lamp in the instrument cluster comes on when the ignition is switched on and the charging cable is connected.

The drive system and battery cooling systems may switch on audibly during the charging process, depending on the temperature.

Removing the charging cable

The battery is charged completely when the indicator in the charge level gauge is at 100% (▷ page 81).

Make sure the charging cable has been disconnected before driving off. The vehicle or charging cable may otherwise be damaged.

- Press release button ④ on cable plug ⑤ and disconnect it from charge socket ③.
- Disconnect the charging cable from the stationary connection.
- Slip cover ② on charge socket ③.
- Close charge socket flap ①.

Charging at a public charging station

The payment procedure and charging processes may differ between public charging stations, depending on the provider. Please make yourself familiar with the proper procedures of the public charging station at which you are intending to charge your vehicle.

Charging station without charging communication

You must activate charging stations without charging communication before the charging process. This can be done with an RFID card or a telephone call, for example.

Observe the provider's instructions at the charging station.

Charging station with charging communication („Plug&Charge“)

You do not have to activate charging stations with charging communication before the charging process. This is done by the vehicle. This function is called "Plug & Charge". Information is exchanged between the vehicle and the charging station via the charging cable for activation.

This is for:

- mutual authorization of the vehicle and the charging station
- verification of contract data
- automatic billing of the energy costs

Electronic certificates are used here for secure exchange of data.

If the verification of contract data is successful, the charging process is initiated.

ⓘ A preliminary version of the ISO/IEC 15118 standard is used for communication between the vehicle and the charging station. If it is necessary to update your vehicle, consult an authorized electric drive smart center.

In order to use "Plug & Charge", you have to configure the functions of your vehicle on the "Vehicle Homepage" (▷ page 120). For this you require a "Plug & Charge" certificate which you receive from your power company after concluding a suitable contract. Consult an authorized electric drive smart center if you have problems with the configuration or have no access to the Internet.

The charging station offers information on the availability of electricity and costs. This information is processed by the vehicle and is used for an optimum charging of the high-voltage battery (▷ page 123). The energy costs are automatically calculated after the charging process is complete.

With your existing electricity contract, you and others who have access to your vehicle can charge the costs to your electricity bill. For this reason, cancel your existing electricity contract for this vehicle before you sell it. Delete your "Plug & Charge" certificate by all means.

ⓘ You can delete the certificate from the vehicle's data on the "Vehicle Homepage". Please consult an authorized electric drive smart center if you do not have access to the Internet.

If the charging station allows the connected vehicle access to the Internet, you can call up and change information pertaining to the vehicle on the "Vehicle Homepage" (▷ page 120).

Connecting the charging cable

▶ Engage the parking brake.

▶ Move the gear selector lever to park position **P**.

▶ Switch off the ignition.

▶ Open the charge socket flap.

▶ Remove the cover from the charge socket.

▶ Insert plug of the charging cable into the charge socket to the stop.
The high-voltage battery is being charged.

ⓘ The vehicle must not be moved during charging.

The indicator lamp in the multifunction display comes on when the ignition is switched on and the charging cable is connected.

ⓘ The drive system and battery cooling systems may switch on audibly during the charging process, depending on the temperature.

Removing the charging cable

The battery is charged completely when the indicator in the charge level gauge is at 100% (▷ page 81).

! Make sure the charging cable has been disconnected before driving off. The vehicle or charging cable may otherwise be damaged.

When the battery is charged:

- ▶ Disconnect the charging cable plug from the charge socket on the vehicle.
- ▶ Slip the cover on the vehicle's charge socket.
- ▶ Close the charge socket flap.

Problems with the charging process

Problem	Possible causes/consequences and ▶ Solutions
The charge socket flap does not open.	The charge socket flap is not unlocked. ▶ Unlock the vehicle (▷ page 53).
	The batteries of the key are discharged. ▶ Unlock the vehicle with the key manually (▷ page 177).
	The charge socket flap is unlocked but the opening mechanism is jammed. ▶ Lock and unlock the vehicle again. If the opening mechanism is still jammed: ▶ Contact an authorized electric drive smart center.
The charging cable cannot be inserted into the vehicle power socket.	The vehicle power socket is locked. ▶ Make sure that the gear selector lever is in position **P**.
The charging cable plug cannot be removed from the vehicle power socket.	The charging cable plug is not unlocked. ▶ Press the button on the key. The charging cable plug in the vehicle power socket is released. ▶ Remove the charging cable plug from the vehicle power socket.

Online access to the vehicle

General

WARNING

Observe the legal regulations of the country in which you are currently located when using the "Vehicle Homepage". If the operation of communications devices while driving is permitted by law, use such devices only when traffic conditions permit you to do so safely. You can be distracted from traffic events. There is a risk of an accident.

Only use the "Vehicle Homepage" before and/or after a journey.

With the "Vehicle Homepage", you can call up remote query or remote configuration functions of your vehicle. Calling up remotely is possible with every computer with Internet access and with many modern smart phones.

You can reach the "Vehicle Homepage" via your web browser under the following address:

http://vh.smart.com

In order to use the "Vehicle Homepage", you must agree to the general terms and conditions and data protection provisions.

Access to the "Vehicle Homepage" is free of charge for three years beginning with new vehicle delivery. After expiry of the

free of charge service life you can continue to use the "Vehicle Homepage" with costs. Further information can be obtained at any authorized electric drive smart center.

The "Vehicle Homepage" is available in the following languages:

- German
- English
- French
- Italian
- Spanish
- Portuguese
- Dutch

Further information concerning supported end devices and available languages can be found under the following address: http://vh.smart.com/info.

In order to call up the "Vehicle Homepage", the vehicle must be connected to the Internet.

This is enabled:

- via a mobile service module (if your vehicle is equipped with it) (▷ page 122)
- via powerline (▷ page 122)

Further information can be found here (▷ page 114).

Personal area setup

You must first set up your personal access under http://vh.smart.com in order to access the "Vehicle Homepage". For this, you need a valid Email address.

Following registration, you then have access to your personal area on the "Vehicle Homepage". The vehicle must be registered in the personal area for you to access the settings of your vehicle. Call up the corresponding input field within the "Vehicle Homepage". Enter the vehicle identification number (VIN) and the vehicle verification code (VVC). This information can be obtained at your authorized electric drive smart center when you receive the vehicle.

Notes on data protection

Please note that the "Vehicle Homepage" allows access to your personal data. For this reason, keep your vehicle verification code (VVC) and your user data in a secure place and safe from unauthorized persons.

Each person who has access to the above information can use the functions on the "Vehicle Homepage". For this reason, make sure than no unauthorized persons have access to your personal area.

After selling the vehicle, you are required to delete the vehicle from your personal area on the "Vehicle Homepage". You must also destroy the vehicle verification code (VVC) documents.

If you have bought a pre-owned vehicle, it may be possible that the previous owner still has access to the "Vehicle Homepage". For this reason, have a new vehicle verification code (VVC) reissued to you at an authorized electric drive smart center after purchase. With this new code you can set up the access to your vehicle as described in the "Personal area setup" section. Here you can also deactivate the previous owner's access, should it still be active.

Calling up the functions of the "Vehicle Homepage"

If the vehicle is registered in your personal area of the "Vehicle Homepage", you can, for example, access the following functions:

- call up the current charge level
- program the departure time
- activate the "Air conditioning before start" function

When the vehicle is being charged, you can call up the estimated charging time and the attainable range. Both results are esti-

mated values because, for example, they are influenced by the following factors:

- outside temperature
- active electrical consumers, e.g. air conditioning, lights
- personal driving style
- traffic conditions

Plan for a sufficient reserve accordingly.

Connecting the vehicle to the Internet

Via mobile service module

This function is only available if the vehicle is equipped with a mobile service module.

You can use the "Vehicle Homepage" when the vehicle has connected to the Internet via the mobile service module. The mobile service module uses GSM (Global System for Mobile Communications) and transfers the required data via radio transmission. The vehicle automatically detects if a connection to the Internet via the mobile service module is available or not. No pre-settings need to be done.

In order to use data transfer via the mobile service module you do not need a SIM card and no contract.

There may be service limitations if the vehicle is located for example in a underground garage. Service limitations may also appear in areas with poor mobile service coverage. In theses cases you can launch the Internet connection via powerline (▷ page 122).

Via powerline

You can also access the "Vehicle Homepage" if you do not have GSM reception. This is possible for example via your DSL router. This connection is built by the plugged in charging cable with the aid of the powerline technology.

The vehicle supports powerline communication according to the "HomePlug AV" standard. Data is transmitted via phase L1 and the neutral conductor of the power line.

In order for the vehicle to access the Internet, you require a commercially available adapter of the "HomePlug AV" standard. This adapter must also have an encryption button so that it can be configured to communicate with the vehicle. Connect the adapter to the power supply as well as your Internet connection. If the adapter is connected to different phase than L1, a phase coupler must be additionally installed. Only in this way can stable communication be guaranteed. For questions, consult a qualified electrician.

If you already have a powerline network installed, the vehicle can be integrated into it.

To establish a connection between the vehicle and a powerline adapter, carry out the following:

▶ Connect the vehicle to a power socket or a wallbox.
The right indicator lamp on the vehicle socket must flash green.

▶ Insert the powerline adapter into a neighboring power socket. Observe that the vehicle and the adapter are connected via phase L1.

▶ Switch on the ignition.

▶ Call up the Charge current menu on the control system (▷ page 92).

Carry out the following steps within 30 seconds:

▶ **If the value of the charge current is not set to 8 A:** set the value to 8 A and confirm.

▶ Set the value of the charge current to 12 A and confirm.

▶ Set the value of the charge current to 8 A and confirm.

▶ Set the value of the charge current to 12 A and confirm.

▶ Press the encryption button on the powerline adapter within three minutes. When the powerline adapter shows a connection, the connection process was successful.

ⓘ Observe the separate operating instructions of the powerline adapter.

ⓘ Contact an authorized electric drive smart center if you have any questions.

▶ Next, set the value of the charge current to the desired value once again.

As soon as the vehicle establishes an Internet connection, you can also use the "Vehicle Homepage" at home during the charging process. Changes you have made via the "Vehicle Homepage" are adopted after the charging process is complete. This data transmission ends after approximately three days.

Intelligent charging management

If you wish to charge economically and with minimal damage to the battery, you must set a departure time (▷ page 90). This option to optimize the charging process depends on your electricity contract and the local power supplier. Your vehicle detects this option automatically. Depending on the departure time which is set, the charging process of the high-voltage battery may not be started immediately or may be interrupted during the process.

Front compartment

Service flap

Remove the service flap to check the battery coolant level, windshield washer reservoir level, and brake fluid level.

Insert the service flap on the front of the vehicle so that it does not get damaged or dirty.

ⓘ The service flap has a strap on the rear side that ties it to the vehicle body.

⚠ WARNING

Always turn the key to starter switch position **0** and remove the key from the starter switch before opening the service flap.

If the windshield wipers should inadvertently be switched on, you could be seriously injured by the wiper washer drive, which is located just below the service flap.

⚠ WARNING

Make sure the service flap is locked while driving. Otherwise, the service flap could become detached and pose a hazard to you or others.

❗ Check the fill levels at regular intervals.

❗ Carefully remove ice, snow, and any other deposits from the air intake grilles above the service flap to ensure air intake at all times.

▶ Park the vehicle on level ground.

▶ Switch off the ignition.

▶ Engage the parking brake.

Removing

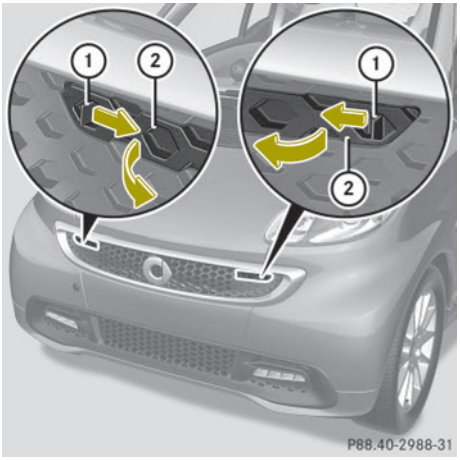

- ▶ Using a suitable object, push both openers ① towards the inside in direction of the arrows.
  Both levers ② are released from the radiator grille.
- ▶ Pull both levers ② forward in direction of the arrows.

- ▶ Pull both levers ② fully towards the outside in the direction of the arrows.
- ▶ Lift the front of service flap ③.
- ▶ First pull service flap ③ forward slightly and then remove it upwards as indicated by arrow ④.

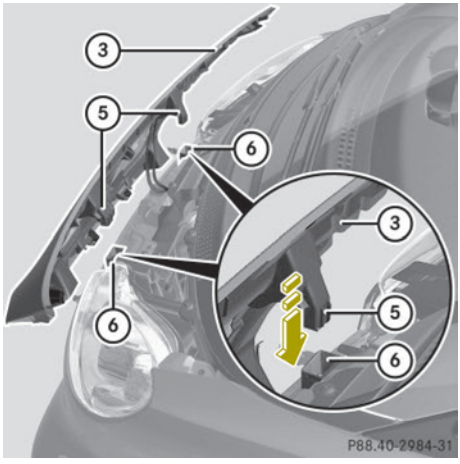

- ▶ Insert hooks ⑤ on the back of service flap ③ into openings ⑥.

Remounting

- ▶ Lift service flap ③ out of openings ⑥.

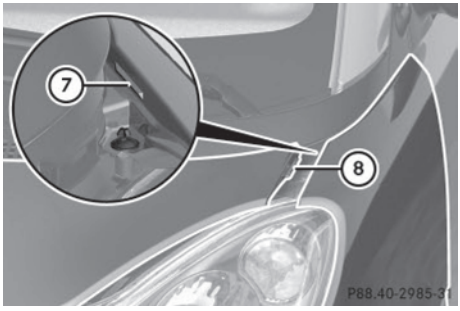

▶ Insert left and right links ⑧ of service flap ③ under links ⑦ on the fender.

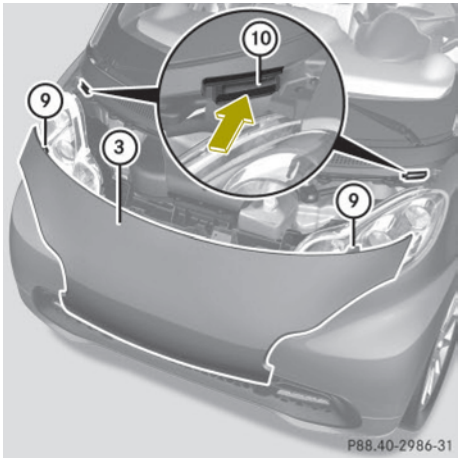

▶ Insert both tabs ⑨ on the back of service flap ③ completely into openings ⑩.

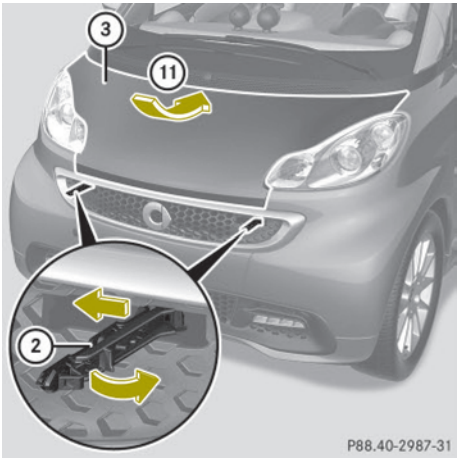

▶ Push service flap ③ down in direction of arrow ⑪.

▶ First push both levers ② inward and then to the rear.

▶ Press both levers ② into the radiator grille until they engage.

Coolant

⚠ **WARNING**

The cooling system is pressurized. Therefore, do not unscrew the cap before the drive system has cooled down. Wait for a

cooling period of at least 30 minutes. Otherwise, you could be seriously burned if hot coolant escapes.

The coolant is a mixture of water and anti-corrosion/antifreeze. To check the coolant level the vehicle must be parked on level ground and the drive system must have cooled down. For more information, see „Coolants“ (▷ page 219).

The battery coolant reservoir is located in the front compartment on the driver's side.

The coolant expansion tank for the battery- and drive system cooling is located in the front compartment on the left-hand side in the direction of travel.

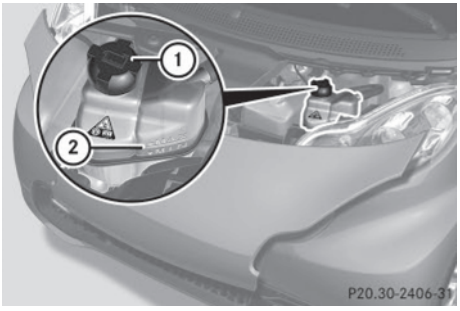

Checking coolant level

- Allow the coolant to cool down for at least 30 minutes.
- Remove the service flap and insert it on the front of the vehicle (▷ page 123).
- Perform a visual check of the fluid level in coolant reservoir ②.

  The coolant level must be between the markings MAX and MIN.
- If necessary, add coolant.

Adding coolant

- Cover pressure cap ① with a rag.
- Slowly turn pressure cap ① approximately ½ turn counterclockwise to release any excess pressure.
- Continue turning pressure cap ① counterclockwise and remove it.
- Add coolant as required. The coolant level may not exceed the maximum filling level.
- Reinstall and tighten pressure cap ①.
- Remount the service flap and close it (▷ page 123).

Windshield/rear window washer system

Both the windshield and the rear window[6] washer are supplied from the windshield washer reservoir.

The recommended minimum filling level is 1.06 US qt (1.0 l).

- Remove the service flap and insert it on the front of the vehicle (▷ page 123).

The windshield washer reservoir is located in the front compartment on the driver's side.

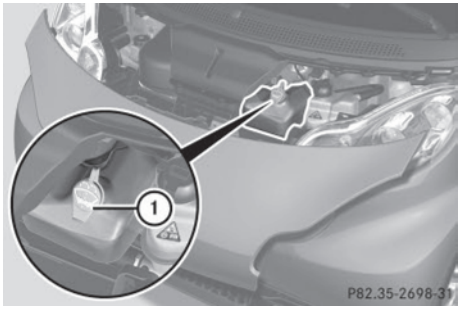

WARNING

Windshield washer concentrate is highly flammable. Fire, naked flames and smoking are prohibited when windshield washer concentrate is being handled.

6 Coupé only.

- Use a windshield washer concentrate labeled for summer and water for temperatures above freezing point.
- Use a windshield washer concentrate labeled for winter and water for temperatures below freezing point.

! Always use a windshield washer concentrate labeled for winter where temperatures may fall below freezing point. Failure to do so could result in damage to the washer system/reservoir.

- Premix the windshield washer fluid in a suitable container.

  Observe mixing ratios depending on the outside temperature (▷ page 218).
- Use the tab to pull cap ① upwards.
- Refill the windshield washer reservoir.
- Push cap ① onto the windshield washer reservoir.
- Remount the service flap and close it (▷ page 123).

Brake fluid

⚠ **WARNING**

During vehicle operation, the boiling point of the brake fluid is continuously reduced through the absorption of moisture from the atmosphere. Under extremely strenuous operating conditions, this moisture content can lead to the formation of bubbles in the system, thus reducing the system's efficiency.

Therefore, the brake fluid must be replaced regularly. Refer to your vehicle's Maintenance Booklet for replacement interval.

The brake fluid level in the brake fluid reservoir may be too low if the brake warning lamp in the instrument cluster comes on (▷ page 23) although the parking brake is released.

! If you find that the brake fluid in the brake fluid reservoir has fallen to the minimum mark or below, have the brake system checked for brake pad thickness and leaks immediately. Contact an authorized electric drive smart center immediately. Do not add brake fluid as this will not solve the problem.

- Remove the service flap and insert it on the front of the vehicle (▷ page 123).

The brake fluid reservoir is located in the front compartment on the passenger side.

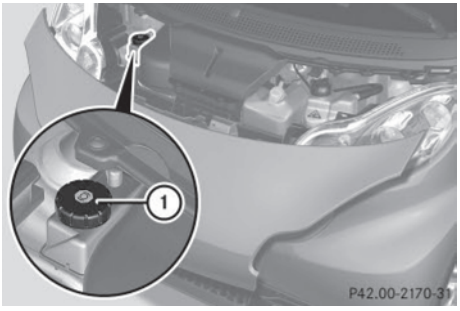

Checking brake fluid level

- Perform a visual check of the brake fluid reservoir ①.

  The brake fluid level is correct when it is between the minimum mark and the maximum mark.
  - If the brake fluid level has fallen slightly below the minimum mark, drive to an authorized electric drive smart center.
  - If the brake fluid level has fallen significantly below the minimum mark, call Roadside Assistance or an authorized electric drive smart center.
- Remount the service flap and close it (▷ page 123).

Tires and wheels

Safety notes

Contact an authorized electric drive smart center for information on tested and rec-

ommended rims and tires for summer and winter operation. They can also offer advice concerning tire service and purchase.

⚠ WARNING

Replace rims or tires with the same designation, manufacturer and type as shown on the original part. For further information contact an authorized electric drive smart center. If incorrectly sized rims and tires are mounted, the wheel brakes or suspension components can be damaged. Also, the operating clearance of the wheels and the tires may no longer be correct.

⚠ WARNING

Worn, old tires can cause accidents. If the tire tread is worn to minimum tread depth, or if the tires have sustained damage, replace them.

When replacing rims, only use genuine smart wheel bolts specified for the particular rim type. Failure to do so can result in the bolts loosening and possibly an accident.

Retreaded tires are not tested or recommended by smart, since previous damage cannot always be recognized on retreads. The operating safety of the vehicle cannot be assured when such tires are used.

⚠ WARNING

If you feel a sudden significant vibration or ride disturbance, or you suspect that possible damage to your vehicle has occurred, you should turn on the hazard warning flashers, carefully slow down, and drive with caution to an area which is a safe distance from the road.

Inspect the tires and the vehicle underbody for possible damage. If the vehicle or tires appear unsafe, have the vehicle towed to the nearest authorized electric drive smart center or tire dealer for repairs.

⚠ WARNING

Do not drive with a flat tire. A flat tire affects the ability to steer or brake the vehicle. You could lose control of the vehicle. Continued driving with a flat tire or driving at high speed with a flat tire will cause excessive heat build-up and possibly a fire.

Modifications to the brake system and wheels and the use of brake dust rings are not permissible.

Important guidelines

- Only use sets of tires and rims of the same type and make.
- Tires must be of the correct size for the rim.
- Break in new tires for approximately 60 miles (100 km) at moderate speeds.
- Regularly check the tires and rims for damage. Dented or bent rims can cause tire pressure loss and damage to the tire beads.
- If vehicle is heavily loaded, check tire inflation pressure and correct as required.
- Do not allow your tires to wear down too far. Adhesion properties on wet roads are sharply reduced at tread depths of less than $^{1}/_{8}$ in (3 mm).

Recommended tire inflation pressure

⚠ WARNING

Follow recommended tire inflation pressures.

Do not underinflate tires. Underinflated tires wear excessively and/or unevenly, adversely affect handling and energy consumption of the vehicle, and are more likely to fail from being overheated.

Do not overinflate tires. Overinflated tires can adversely affect handling and

ride comfort, wear unevenly, increase stopping distance, and result in sudden deflation (blowout) because they are more likely to become punctured or damaged by road debris, potholes etc.

Do not overload the tires by exceeding the specified load limit as indicated on the Tire and Loading Information placard on the driver's door B-pillar. Overloading the tires can overheat them, possibly causing a blowout. Overloading the tires can also result in handling or steering problems, or brake failure.

Your vehicle is equipped with the Tire and Loading Information placard located on the driver's door B-pillar (▷ page 134).

The tire inflation pressure should be checked regularly. Only adjust the tire inflation pressure on cold tires. The tires can be considered cold if the vehicle has been parked for at least 3 hours or driven less than 1 mile (1.6 km). Depending on the ambient temperature, the driving speed and the tire load, the tire temperature changes. When the tire temperature changes by 18°F (10°C), the tire inflation pressure will change by approximately 10 kpa (0.1 bar, 1.5 psi). Keep this in mind when checking tire inflation pressure on warm tires and adjust the tire pressure only if the tire inflation pressure is too low for the current operating conditions. If you check the tire inflation pressure when the tires are warm, the reading will be higher than the cold reading. This is normal. Do not let air out to match the specified cold tire inflation pressure. Otherwise, the tire will be underinflated.

Follow recommended cold tire inflation pressures listed on Tire and Loading Information placard on the driver's door B-pillar.

Keeping the tires properly inflated provides the best handling, tread life and riding comfort.

In addition to the Tire and Loading Information placard on the driver's door B-pillar, also consult the tire inflation pressure label (if available) on the inside of the filler flap for any additional information pertaining to special driving situations. For more information, see "Important notes on tire inflation pressure" (▷ page 129).

ⓘ Data shown on Tire and Loading Information placard example are for illustration purposes only. Tire data are specific to each vehicle and may vary from data shown in the following illustration. Refer to Tire and Loading Information placard on vehicle for actual data specific to your vehicle.

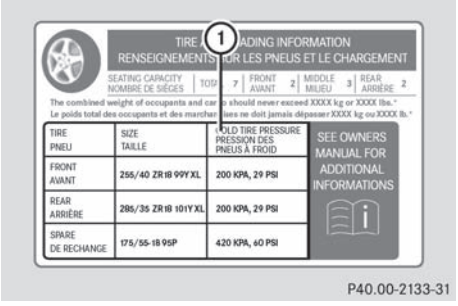

The Tire and Loading Information placard lists the recommended cold tire inflation pressures ① for maximum loaded vehicle weight. The tire inflation pressures listed apply to the tires installed as original equipment.

Important notes on tire inflation pressure

⚠ **WARNING**

If the tire inflation pressure drops repeatedly, check the tires for punctures from foreign objects and/or whether air is leaking from the valves or from around the rim.

Tire temperature and tire inflation pressure are also increased while driving,

depending on the driving speed and the tire load.

Potential problems associated with underinflated and overinflated tires

Underinflated tires

WARNING

Follow recommended tire inflation pressures.

Do not underinflate tires. Underinflated tires wear excessively and/or unevenly, adversely affect handling and energy consumption of the vehicle, and are more likely to fail from being overheated.

Underinflated tires can

- cause excessive and uneven tire wear
- adversely affect energy consumption of the vehicle
- lead to tire failure from being overheated
- adversely affect handling characteristics

Overinflated tires

WARNING

Follow recommended tire inflation pressures.

Do not overinflate tires. Overinflated tires can adversely affect handling and ride comfort, wear unevenly, increase stopping distance, and result in sudden deflation (blowout) because they are more likely to become punctured or damaged by road debris, potholes etc.

Overinflated tires can

- adversely affect handling characteristics
- cause uneven tire wear
- be more prone to damage from road hazards
- adversely affect ride comfort
- increase stopping distance

Checking tire inflation pressure

Safety notes

WARNING

Follow recommended tire inflation pressures.

Do not underinflate tires. Underinflated tires wear excessively and/or unevenly, adversely affect handling and energy consumption of the vehicle, and are more likely to fail from being overheated.

Do not overinflate tires. Overinflated tires can adversely affect handling and ride comfort, wear unevenly, increase stopping distance, and result in sudden deflation (blowout) because they are more likely to become punctured or damaged by road debris, potholes etc.

Do not overload the tires by exceeding the specified load limit as indicated on the Tire and Loading Information placard on the driver's door B-pillar. Overloading the tires can overheat them, possibly causing a blowout. Overloading the tires can also result in handling or steering problems, or brake failure.

Check the tire inflation pressure at least once a month.

Check and adjust the tire inflation pressure when the tires are cold (▷ page 129).

Checking tire inflation pressure manually

Follow the steps below to achieve correct tire inflation pressure:

▶ Remove the cap from the valve on one tire.

▶ Firmly press a tire gauge onto the valve.

▶ Read the tire inflation pressure on tire gauge and check against the recommended tire inflation pressure on the Tire and Loading Information placard on the driver's door B-pillar (▷ page 134). If necessary, add air to achieve the recommended tire inflation pressure.

- If you have overfilled the tire, release tire inflation pressure by pushing the metal stem of the valve with e.g. a tip of a pen. Then recheck the tire inflation pressure with the tire gauge.
- Install the valve cap.
- Repeat this procedure for each tire.

Tire Pressure Monitoring System (TPMS)*

Your vehicle may be equipped with a **T**ire **P**ressure **M**onitoring **S**ystem (TPMS).

It monitors the tire inflation pressure in all four tires. A warning is issued to alert you to a decrease in pressure in one or more of the tires.

The Tire Pressure Monitoring System (TPMS) is equipped with a combination low tire pressure/TPMS malfunction telltale in the instrument cluster. Depending on how the telltale illuminates, it indicates a low tire pressure condition or a malfunction in the TPMS system itself:

- If the telltale illuminates continuously, one or more of your tires is significantly underinflated. There is no malfunction in the TPMS.
- If the telltale flashes for 60 seconds and then stays illuminated, the TPMS system itself is not operating properly.

The TPMS only functions on wheels that are equipped with the proper electronic sensors.

⚠ WARNING

The TPMS does not indicate a warning for wrongly selected inflation pressures. Always adjust tire inflation pressure according to the Tire and Loading Information placard on the driver's door B-pillar.

The TPMS is not able to issue a warning due to a sudden dramatic loss of pressure (e.g. tire blowout caused by a foreign object). In this case bring the vehicle to a halt by carefully applying the brakes and avoiding abrupt steering maneuvers.

⚠ WARNING

Each tire should be checked monthly when cold and inflated to the inflation pressure recommended by the vehicle manufacturer on the Tire and Loading Information placard. If your vehicle has tires of a different size than the size indicated on the Tire and Loading Information placard, you should determine the proper tire inflation pressure for those tires.

As an added safety feature, your vehicle has been equipped with a tire pressure monitoring system (TPMS) that illuminates a low tire pressure telltale when one or more of your tires is significantly underinflated.

Accordingly, when the low tire pressure telltale illuminates, you should stop and check your tires as soon as possible, and inflate them to the proper pressure. Driving on a significantly underinflated tire causes the tire to overheat and can lead to tire failure.

Underinflation also increases energy consumption, reduces tire tread life, and may affect the vehicle's handling and stopping ability. Please note that the TPMS is not a substitute for proper tire maintenance, and it is the driver's responsibility to maintain correct tire pressure, even if underinflation has not reached the level to trigger illumination of the TPMS low tire pressure telltale.

Your vehicle has also been equipped with a TPMS malfunction indicator to indicate when the system is not operating properly. The TPMS malfunction indicator is combined with the low tire pressure telltale. When the system detects a malfunction, the telltale will flash for approximately 1 minute and then remain continuously illuminated.

This sequence will continue upon subsequent vehicle start-ups as long as the mal-

* optional

▷▷

function exists. When the malfunction indicator is illuminated, the system may not be able to detect or signal low tire pressure as intended.

TPMS malfunctions may occur for a variety of reasons, including the installation of incompatible replacement or alternate tires or wheels on the vehicle that prevent the TPMS from functioning properly. Always check the TPMS malfunction telltale after replacing one or more tires or wheels on your vehicle to ensure that the replacement or alternate tires and wheels allow the TPMS to continue to function properly.

If a condition causing the TPMS to malfunction develops, it may take up to 10 minutes for the system to signal a malfunction using the TPMS telltale flashing and illumination sequence.

The telltale extinguishes after a few minutes driving if the malfunction has been corrected.

Operating radio transmission equipment (e.g. wireless headsets, two-way radios) in or near the vehicle could cause the TPMS to malfunction.

USA only:

This device complies with Part 15 of the FCC Rules. Operation is subject to the following two conditions:

- This device may not cause harmful interference, and
- this device must accept any interference received, including interference that may cause undesired operation.

Any unauthorized modification to this device could void the user's authority to operate the equipment.

Canada only:

This device complies with RSS-210 of Industry Canada. Operation is subject to the following two conditions:

- This device may not cause interference, and
- this device must accept any interference received, including interference that may cause undesired operation of the device.

Any unauthorized modification to this device could void the user's authority to operate the equipment.

Restarting the TPMS

WARNING

It is the driver's responsibility to calibrate the TPMS on the recommended cold inflation pressure. Underinflated tires affect the ability to steer or brake and might cause you to lose control of the vehicle.

When you restart the TPMS, the system sets new reference values for each tire.

The TPMS must be restarted when you have adjusted the tire inflation pressure to a new level (e.g. because of different load or driving conditions). The TPMS is then recalibrated to the current tire inflation pressures.

▶ Using the Tire and Loading Information placard on the driver's door B-pillar (▷ page 134), make sure the tire inflation pressure of all four tires is correct.

Restart the TPMS after adjusting the tire inflation pressure to the inflation pressure recommended for the vehicle operating condition. Tire pressure should only be adjusted on cold tires. Observe the recommended tire inflation pressure on the Tire and Loading Information placard on the driver's door B-pillar (▷ page 134).

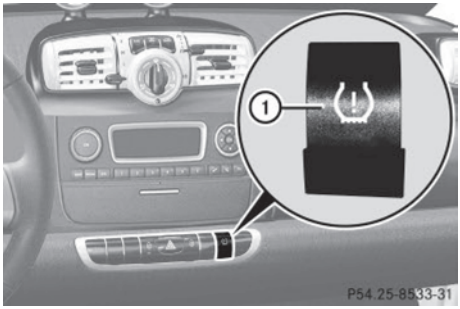

▶ Press Restarting TPMS button ①.
The combination low tire pressure/TPMS malfunction telltale in the instrument cluster (▷ page 23) flashes for approximately 5 seconds and then goes out.

After driving a few minutes the system verifies that the current tire inflation pressures are within the system's specified range. Afterwards the current tire inflation pressures are accepted as reference pressures and then monitored.

Maximum tire inflation pressure

⚠ WARNING

Never exceed the max. tire inflation pressure. Follow recommended tire inflation pressures.

Do not underinflate tires. Underinflated tires wear excessively and/or unevenly, adversely affect handling and energy consumption, and are more likely to fail from being overheated.

Do not overinflate tires. Overinflated tires can adversely affect handling and ride comfort, wear unevenly, increase stopping distance, and result in sudden deflation (blowout) because they are more likely to become punctured or damaged by road debris, potholes etc.

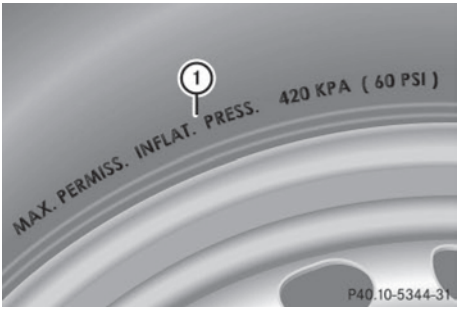

ⓘ For illustration purposes only. Actual data on tires are specific to each vehicle and may vary from data shown in above illustration.

This is the maximum permissible tire inflation pressure ① for the tire.

Always follow the recommended tire inflation pressure (▷ page 128) for proper tire inflation.

Loading the vehicle

Two labels on your vehicle show how much weight it may properly carry.

1) The Tire and Loading Information placard can be found on the driver's door B-pillar. This placard tells you important information about the number of people that can be in the vehicle and the total weight that can be carried in the vehicle. It also contains information on the proper size and recommended tire inflation pressures for the original equipment tires on your vehicle.
2) The certification label, also found on the driver's door B-pillar, tells you about the gross weight capacity of your vehicle, called the Gross Vehicle Weight Rating (GVWR). The GVWR includes the weight of the vehicle, all occupants, automotive fluids and cargo. The certification label also tells you about the front and rear axle weight capacity, called the Gross Axle

Weight Rating (GAWR). The GAWR is the total allowable weight that can be carried by a single axle (front or rear). Never exceed the GVWR or GAWR for either the front axle or rear axle.

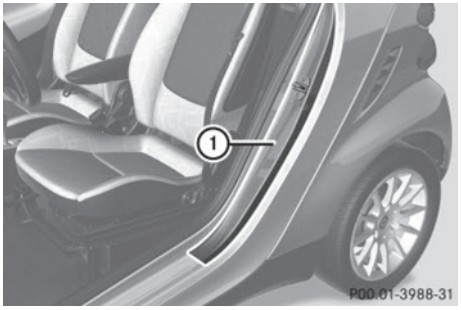

① Driver's door B-pillar

Following is a discussion on how to work with the information contained on the Tire and Loading Information placard with regards to loading your vehicle.

Tire and Loading Information

WARNING

Do not overload the tires by exceeding the specified load limit as indicated on the Tire and Loading Information placard on the driver's door B-pillar. Overloading the tires can overheat them, possibly causing a blowout. Overloading the tires can also result in handling or steering problems, or brake failure.

Tire and Loading Information placard

Data shown on Tire and Loading Information placard example are for illustration purposes only. Load limit data are specific to each vehicle and may vary from data shown in the following illustration. Refer to Tire and Loading Information placard on vehicle for actual data specific to your vehicle.

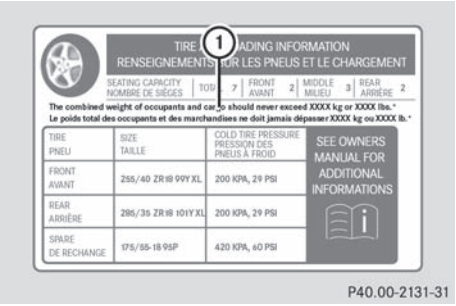

The Tire and Loading Information placard showing load limit information ① is located on the driver's door B-pillar (▷ page 134).

▶ Locate the statement "The combined weight of occupants and cargo should never exceed XXXX kg or XXXX lbs." on the Tire and Loading Information placard.

The combined weight of all occupants and cargo/luggage should never exceed the weight referenced in that statement.

Seating capacity

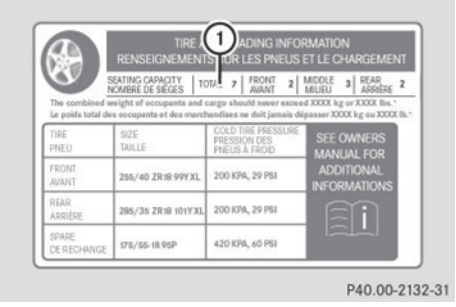

The seating capacity gives you important information on the number of occupants that can be in the vehicle. The Tire and Loading Information placard showing seating capacity ① is located on the driver's door B-pillar (▷ page 134).

Data shown on Tire and Loading Information placard example are for illustration purposes only. Seating capacity data are specific to each vehicle and may vary from data shown in the following

illustration. Refer to Tire and Loading Information placard on vehicle for actual data specific to your vehicle.

Steps for determining correct load limit

The following steps have been developed as required of all manufacturers under Title 49, Code of U.S. Federal Regulations, Part 575 pursuant to the "National Traffic and Motor Vehicle Safety Act of 1966".

- **Step 1:** Locate the statement "The combined weight of occupants and cargo should never exceed XXXX kg or XXXX lbs." on your vehicle's Tire and Loading Information placard.
- **Step 2:** Determine the combined weight of the driver and passenger that will be riding in your vehicle.
- **Step 3:** Subtract the combined weight of the driver and passenger from XXXX kilograms or XXXX lbs.
- **Step 4:** The resulting figure equals the available amount of cargo and luggage load capacity. For example, if the "XXXX" amount equals 540 lbs and there will be one 150 lbs passenger in your vehicle, the amount of available cargo and luggage load capacity is 390 lbs (540 lbs - 150 lbs = 390 lbs).
- **Step 5:** Determine the combined weight of luggage and cargo being loaded on the vehicle. That weight may not safely exceed the available cargo and luggage load capacity calculated in step 4.

The maximum cargo compartment load is 110 lbs (50 kg).

The following table shows examples on how to calculate total and cargo load capacities with varying seating configurations and number and size of occupants. The following examples use a load limit of 540 lbs. **This is for illustration purposes only**. Make sure you are using the actual load limit for your vehicle stated on the vehicle's Tire and Loading Information placard (▷ page 134).

The higher the weight of all occupants, the less cargo and luggage load capacity is available.

Examples for steps 1 to 3

		Example 1	Example 2
Step 1	**Combined weight limit of occupants and cargo from Tire and Loading Information placard**	540 lbs	540 lbs
Step 2	**Number of occupants (driver and passenger)**	2	1
	Occupants weight	Occupant 1: 150 lbs Occupant 2: 180 lbs	Occupant 1: 150 lbs
	Combined weight of all occupants	330 lbs	150 lbs
Step 3	**Available cargo weight (total load limit from Tire and Loading Information placard minus combined weight of all occupants)**	540 lbs - 330 lbs = 210 lbs	540 lbs - 150 lbs = 390 lbs

Certification label

Even after careful determination of the combined weight of all occupants and cargo as to not exceed the permissible load limit, you must make sure your vehicle never exceeds the Gross Vehicle Weight Rating (GVWR) and the Gross Axle Weight Rating (GAWR) for either the front or rear axle. You can obtain the GVWR and GAWR from the certification label. The certification label can be found on the driver's door B-pillar, see "Technical data" (▷ page 214).

Gross Vehicle Weight Rating (GVWR) means:

The total weight of the vehicle, all occupants, and all cargo must never exceed the GVWR.

Gross Axle Weight Rating (GAWR) means:

The total allowable weight that can be carried by a single axle (front or rear).

To assure that your vehicle does not exceed the maximum permissible weight limits (GVWR and GAWR for front and rear axle), have the loaded vehicle (including driver, passenger, and all cargo) weighed on a suitable commercial scale.

Maximum tire load

⚠ WARNING

Do not overload the tires by exceeding the specified load limit as indicated on the Tire and Loading Information placard on the driver's door B-pillar. Overloading the tires can overheat them, possibly causing a blowout. Overloading the tires can also result in handling or steering problems, or brake failure.

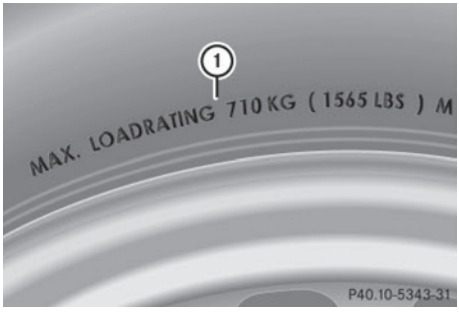

ⓘ For illustration purposes only. Actual data on tires are specific to each vehicle and may vary from data shown in above illustration.

The maximum tire load ① is the maximum weight the tires are designed to support.

For more information on tire load rating (▷ page 140).

For information on calculating total and cargo load capacities (▷ page 135).

Direction of rotation

Unidirectional tires offer added advantages, such as better hydroplaning performance. To benefit, however, you must make sure the tires rotate in the direction specified.

An arrow on the sidewall indicates the intended direction of rotation (spinning) of the tire.

Tire care and maintenance

WARNING

Regularly check the tires for damage. Damaged tires can cause tire inflation pressure loss. As a result, you could lose control of your vehicle.

Worn, old tires can cause accidents. If the tire tread is badly worn, or if the tires have sustained damage, replace them.

Check the tire inflation pressure at least once a month. For more information on checking tire inflation pressure, see "Recommended tire inflation pressure" (▷ page 128).

Tire inspection

Every time you check the tire inflation pressure, you should also inspect your tires for the following

- excessive treadwear (▷ page 137)
- cord or fabric showing through the tire's rubber
- bumps, bulges, cuts, cracks or splits in the tread or side of the tire

Replace the tire if you find any of the above conditions.

Life of tire

WARNING

Tires should be replaced after 6 years, regardless of the remaining tread.

The service life of a tire is dependent upon varying factors including but not limited to

- driving style
- tire inflation pressure
- distance driven

Tread depth

WARNING

Although the applicable federal motor vehicle safety laws consider a tire to be worn when the treadwear indicators (TWI) become visible at approximately $^{1}/_{16}$ in (1.6 mm), we recommend that you do not allow your tires to wear down to that level. As tread depth approaches $^{1}/_{8}$ in (3 mm), the adhesion properties on a wet road are sharply reduced.

Depending upon the weather and/or road surface (conditions), the tire traction varies widely.

Do not allow your tires to wear down too far. Adhesion properties on wet roads are sharply reduced at tread depths of less than $^{1}/_{8}$ in (3 mm).

Treadwear indicators (TWI) are required by law. These indicators are located in six places on the tread circumference and become visible at a tread depth of approximately $^{1}/_{16}$ in (1.6 mm), at which point the tire is considered worn and should be replaced.

Recommended minimum tire tread depth:
Summer tires $^{1}/_{8}$ in (3 mm)
Winter tires $^{1}/_{6}$ in (4 mm)

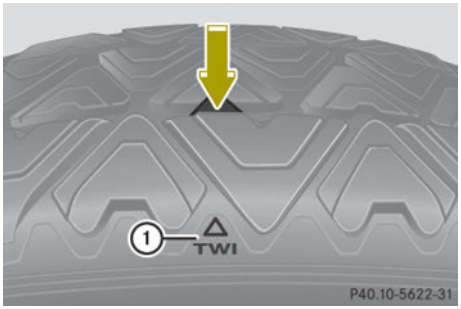

Treadwear indicator ① appears as a solid band across the tread.

Storing tires

! Keep unmounted tires in a cool, dry place with as little exposure to light as possible. Protect tires from contact with oil, grease and fuels.

Cleaning tires

! Never use a round nozzle to power wash tires. The intense jet of water can result in damage to the tire.

Always replace a damaged tire.

Uniform Tire Quality Grading Standards

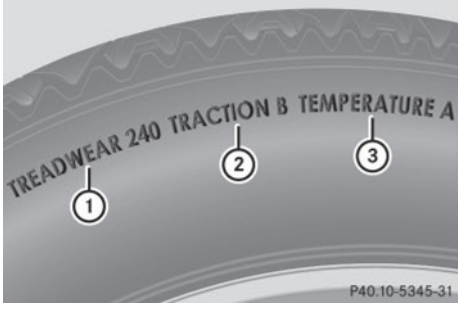

The Uniform Tire Quality Grading is a U.S. Government requirement designed to give drivers consistent and reliable information regarding tire performance. Tire manufacturers are required to grade tires based on three performance factors: treadwear ①, traction ②, and temperature resistance ③. Although not a Government of Canada requirement, all tires made for sale in North America have these grades branded on the sidewall.

i For illustration purposes only. Actual data on tires are specific to each vehicle and may vary from data shown in above illustration.

Quality grades can be found, where applicable, on the tire sidewall between tread shoulder and maximum section width. For example:

Treadwear	Traction	Temperature
200	AA	A

All passenger car tires must conform to federal safety requirements in addition to these grades.

Treadwear

The treadwear grade is a comparative rating based on the wear rate of the tire when tested under controlled conditions on a specified U.S. government test course. For example, a tire graded 150 would wear one and one-half (1 $^{1}/_{2}$) times as well on the government course as a tire graded 100.

The relative performance of tires depends upon the actual conditions of their use, however, and may depart significantly from the norm due to variations in driving habits, service practices and differences in road characteristics and climate.

Traction

⚠ **WARNING**

The traction grade assigned to this tire is based on straight-ahead braking traction tests, and does not include acceleration, cornering, hydroplaning, or peak traction characteristics.

The traction grades, from highest to lowest, are AA, A, B, and C. Those grades represent the tire's ability to stop on wet pavement as measured under controlled conditions on specified government test surfaces of asphalt and concrete. A tire marked C may have poor traction performance.

Temperature

⚠ WARNING

The temperature grade for this tire is established for a tire that is properly inflated and not overloaded. Excessive speed, underinflation, or excessive loading, either separately or in combination, can cause excessive heat build-up and possible tire failure.

The temperature grades are A (the highest), B, and C, representing the tire's resistance to the generation of heat and its ability to dissipate heat when tested under controlled conditions on a specified indoor laboratory test wheel. Sustained high temperature can cause the material of the tire to degenerate and reduce tire life, and excessive temperature can lead to sudden tire failure. The grade C corresponds to a level of performance which all passenger car tires must meet under the Federal Motor Vehicle Safety Standard No. 109. Grades B and A represent higher levels of performance on the laboratory test wheel than the minimum required by law.

Rotating tires

⚠ WARNING

Do not rotate front and rear wheels as they have different dimensions, e.g. rim size, wheel offset etc. Otherwise, the handling can be affected and you could endanger yourself and others.

Thoroughly clean the mounting face of the wheels and brake discs, i.e. the inner side of the wheels/tires each time the wheels/tires are changed. Check for and ensure proper tire inflation pressure.

⚠ WARNING

Have the tightening torque checked after changing a wheel. Wheels could become loose if not tightened with a torque of 81 lb-ft (110 Nm).

Only use genuine smart wheel bolts specified for your vehicle's rims.

For information on wheel change, see "Flat tire" (▷ page 187).

Tire labeling

Besides tire name (sales designation) and manufacturer name, a number of markings can be found on a tire.

Following are some explanations for the markings on your vehicle's tires:

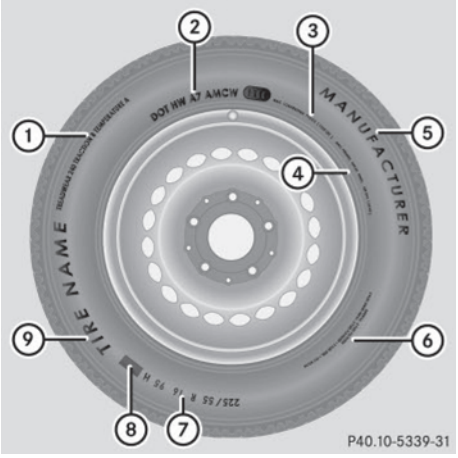

① Uniform Quality Grading Standards (▷ page 138)
② DOT, Tire Identification Number (TIN) (▷ page 142)
③ Maximum tire load (▷ page 136)
④ Maximum tire inflation pressure (▷ page 133)

⑤ Manufacturer
⑥ Tire ply material (▷ page 143)
⑦ Tire size designation, load and speed rating (▷ page 140)
⑧ Load identification (▷ page 142)
⑨ Tire name

ⓘ For illustration purposes only. Actual data on tires are specific to each vehicle and may vary from data shown in above illustration.

For more information, see "Rims and tires" (▷ page 216).

Tire size designation, load and speed rating

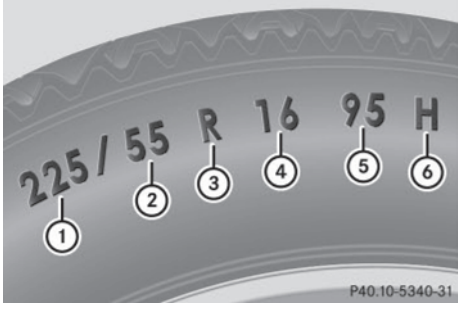

① Tire width
② Aspect ratio in %
③ Radial tire code
④ Rim diameter
⑤ Tire load rating
⑥ Tire speed rating

ⓘ For information purposes only. Actual data on tires are specific to each vehicle and may vary from data shown in above illustration.

General:
Depending on the design standards used, the tire size molded into the sidewall may have no letter or a letter preceding the tire size designation.

No letter preceding the size designation (as illustrated above): Passenger car tire based on European design standards.

Letter "P" preceding the size designation: Passenger car tire based on U.S. design standards.

Letter "LT" preceding the size designation: Light Truck tire based on U.S. design standards.

Letter "T" preceding the size designation: Temporary spare tires which are high pressure compact spares designed for temporary emergency use only.

Tire width

Tire width ① indicates the nominal tire width in mm.

Aspect ratio

Aspect ratio ② is the dimensional relationship between tire section height and section width and is expressed as a percentage. The aspect ratio is arrived at by dividing section height by section width.

Tire code

Tire code ③ indicates the tire construction type. The "R" stands for radial tire type. Letter "D" means diagonal or bias ply construction; letter "B" means belted-bias ply construction.

At the tire manufacturer's option, any tire with a speed capability above 149 mph (240 km/h) can include a "ZR" in the size designation (for example: 245/40 ZR 18).

For additional information, see "Tire speed rating" (▷ page 141).

Rim diameter

Rim diameter ④ is the diameter of the bead seat, not the diameter of the rim edge. Rim diameter is indicated in inches (in).

Tire load rating

⚠ **WARNING**

The tire load rating must always be at least half of the GAWR of your vehicle. Otherwise,

tire failure may result and cause an accident and/or serious personal injury to you or others.

Always replace rims and tires with the same designation, manufacturer and type as shown on the original part.

⚠ WARNING

Do not overload the tires by exceeding the specified load limit as indicated on the Tire and Loading Information placard on the driver's door B-pillar. Overloading the tires can overheat them, possibly causing a blowout. Overloading the tires can also result in handling or steering problems, or brake failure.

Tire load rating ⑤ is a numerical code associated with the maximum load a tire can support.

For example, a load rating of 91 corresponds to a maximum load of 1356 lbs (615 kg) the tire is designed to support.

See also "Maximum tire load" (▷ page 136) where the maximum load associated with the load index is indicated in kilograms and lbs.

For additional information on tire load rating, see "Load identification" (▷ page 142).

Tire speed rating

⚠ WARNING

Even when permitted by law, never operate a vehicle at speeds greater than the maximum speed rating of the tires.

Exceeding the maximum speed for which tires are rated can lead to sudden tire failure, causing loss of vehicle control and possibly resulting in an accident and/or personal injury and possible death, for you and for others.

Regardless of the tire speed rating, local speed limits should be obeyed. Use prudent driving speeds appropriate to prevailing conditions.

Tire speed rating ⑥ indicates the approved maximum speed for the tire.

Summer tires

Index	Speed rating
Q	up to 100 mph (160 km/h)
R	up to 106 mph (170 km/h)
S	up to 112 mph (180 km/h)
T	up to 118 mph (190 km/h)
H	up to 130 mph (210 km/h)
V	up to 149 mph (240 km/h)
W	up to 168 mph (270 km/h)
Y	up to 186 mph (300 km/h)
ZR...Y	above 186 mph (300 km/h)
ZR...(Y)	above 186 mph (300 km/h)
ZR	above 149 mph (240 km/h)

- At the tire manufacturer's option, any tire with a speed capability above 149 mph (240 km/h) can include a "ZR" in the size designation (for example: 245/40 ZR18). To determine the maximum speed capability of the tire, the service description for the tire must be referred to.

  The service description is comprised of tire load rating ⑤ and tire speed rating ⑥.

  If your tire includes "ZR" in the size designation and no service description is given, the tire manufacturer must be consulted for the maximum speed capability.

  If a service description is given, the speed capability is limited by the speed symbol in the service description. Example: 245/40 ZR18 97Y.

  In this example, "97Y" is the service description. The letter "Y" designates the speed rating and the speed capabil-

ity of the tire is limited to 186 mph (300 km/h).

- Any tire with a speed capability above 186 mph (300 km/h) must include a "ZR" in the size designation AND the service description must be placed in parenthesis. Example: 275/40 ZR 18 (99Y). The "(Y)" speed rating in parenthesis designates the maximum speed capability of the tire as being above 186 mph (300 km/h). Consult the tire manufacturer for the actual maximum permissible speed of the tire.

All-season and winter tires

Index	Speed rating
Q M+S [7]	up to 100 mph (160 km/h)
T M+S [7]	up to 118 mph (190 km/h)
H M+S [7]	up to 130 mph (210 km/h)
V M+S [7]	up to 149 mph (240 km/h)

Not all M+S rated tires provide special winter performance. Make sure the tires you use show M+S and the mountain/snowflake marking on the tire sidewall. These tires meet specific snow traction performance requirements of the Rubber Manufacturers Association (RMA) and the Rubber Association of Canada (RAC) and have been designed specifically for use in snow conditions.

Load identification

For illustration purposes only. Actual data on tires are specific to each vehicle and may vary from data shown in above illustration.

In addition to the tire load rating, special load identification ① may be molded into the tire sidewall following the letter designating the tire speed rating ⑥ (▷ page 141).

No specification given: absence of any text (like in above example) indicates a standard load (SL) tire.

XL or Extra Load: designates an extra load (or reinforced) tire.

Light Load: designates a light load tire.

C, D, E: designates load range associated with the maximum load a tire can carry at a specified pressure.

DOT, Tire Identification Number (TIN)

U.S. tire regulations require each new tire manufacturer or tire retreader to mold a TIN into or onto a sidewall of each tire produced.

[7] or M+S for winter tires.

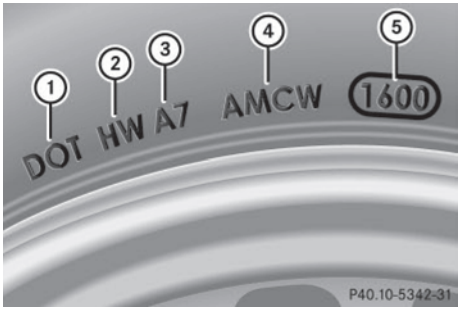

The TIN is a unique identifier which facilitates efforts by tire manufactures to notify purchasers in recall situations or other safety matters concerning tires and gives purchasers the means to easily identify such tires.

The TIN is comprised of "Manufacturer's identification mark" ②, "Tire size" ③, "Tire type code" ④, and "Date of manufacture" ⑤.

ⓘ For illustration purposes only. Actual data on tires are specific to each vehicle and may vary from data shown in above illustration.

DOT (Department of Transportation)

Tire branding symbol ① which denotes the tire meets requirements of the U.S. Department of Transportation.

Manufacturer's identification mark

Manufacturer's identification mark ② denotes the tire manufacturer.

New tires have a mark with two symbols.

Retreaded tires have a mark with four symbols. For more information on retreaded tires (▷ page 127).

Tire size

Code ③ indicates the tire size.

Tire type code

Tire type code ④ may, at the option of the manufacturer, be used as a descriptive code for identifying significant characteristics of the tire.

Date of manufacture

Date of manufacture ⑤ identifies the week and year of manufacture.

The first two figures identify the week, starting with "01" to represent the first full week of the calendar year. The second two figures represent the year.

For example, "3202" represents the 32nd week of 2002.

Tire ply material

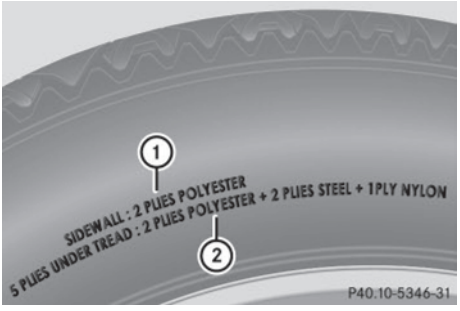

ⓘ For illustration purposes only. Actual data on tires are specific to each vehicle and may vary from data shown in above illustration.

This marking tells you about the type of cord and number of plies in the sidewall ① and under the tread ②.

Tire and loading terminology

Accessory weight

The combined weight (in excess of those standard items which may be replaced) of transmission, power steering, power brakes, power windows, power seats, radio,

and heater, to the extent that these items are available as factory-installed equipment (whether installed or not).

Air pressure

The amount of air inside the tire pressing outward on each square inch of the tire. Air pressure is expressed in pounds per square inch (psi), or kilopascal (kPa) or bars.

Aspect ratio

Dimensional relationship between tire section height and section width expressed in percentage.

Bar

Another metric unit for air pressure. There are 14.5038 pounds per square inch (psi) to 1 bar; there are 100 kilopascals (kPa) to 1 bar.

Bead

The tire bead contains steel wires wrapped by steel cords that hold the tire onto the rim.

Cold tire inflation pressure

Tire inflation pressure when your vehicle has been sitting for at least 3 hours or driven no more than 1 mile (1.6 km).

Curb weight

The weight of a motor vehicle with standard equipment including the maximum capacity of fuel, oil, and coolant, and, if so equipped, air conditioning and additional optional equipment, but without passengers and cargo.

DOT (Department of Transportation)

A tire branding symbol which denotes the tire meets requirements of the U.S. Department of Transportation.

GAWR (Gross Axle Weight Rating)

The GAWR is the maximum permissible axle weight. The gross vehicle weight on each axle must never exceed the GAWR for the front and rear axle indicated on the certification label located on the driver's door B-pillar.

GVW (Gross Vehicle Weight)

The GVW comprises the weight of the vehicle including fuel, tools, installed accessories, passengers and cargo. The GVW must never exceed the GVWR indicated on the certification label located on the driver's door B-pillar.

GVWR (Gross Vehicle Weight Rating)

This is the maximum permissible vehicle weight of the fully loaded vehicle (weight of the vehicle including all options, passengers, fuel, and cargo. It is indicated on certification label located on the driver's door B-pillar.

Kilopascal (kPa)

The metric unit for air pressure. There are 6.9 kPa to 1 psi; another metric unit for air pressure is bars. There are 100 kilopascals (kPa) to 1 bar.

Maximum load rating

The maximum load in kilograms and pounds that can be carried by the tire.

Maximum loaded vehicle weight

The sum of curb weight, accessory weight, total load limit and production options weight.

Maximum permissible tire inflation pressure

This number is the greatest amount of air pressure that should ever be put in the tire.

Normal occupant weight

The number of occupants the vehicle is designed to seat, multiplied by 68 kilograms (150 lbs).

Occupant distribution

The distribution of occupants in a vehicle at their designated seating positions.

Production options weight

The combined weight of those installed regular production options weighing over 5 lbs (2.3 kilograms) in excess of those standard items which they replace, not previously considered in curb weight or accessory weight, including heavy duty brakes, ride levelers, roof rack, heavy duty battery, and special trim.

PSI (Pounds per square inch)

A standard unit of measure for air pressure.

Recommended tire inflation pressure

The recommended tire inflation pressure for normal driving conditions is listed on the Tire and Loading Information placard located on driver's door B-pillar and provides best handling, tread life and riding comfort.

Rim

A metal support for a tire or a tire and tube assembly upon which the tire beads are seated.

Sidewall

The portion of a tire between the tread and the bead.

TIN (Tire Identification Number)

Unique identifier which facilitates efforts by tire manufacturers to notify purchasers in recall situations or other safety matters concerning tires and gives purchasers the means to easily identify such tires. The TIN is comprised of "Manufacturer's identification mark", "Tire size", "Tire type code" and "Date of manufacture".

Tire load rating

Numerical code associated with the maximum load a tire can support.

Tire ply composition and material used

This indicates the number of plies or the number of layers of rubber-coated fabric in the tire tread and sidewall. Tire manufacturers also must indicate the ply materials in the tire and sidewall, which include steel, nylon, polyester, and others.

Tire speed rating

Part of tire designation; indicates the speed range for which a tire is approved.

Total load limit

Rated cargo and luggage load plus 68 kilograms (150 lbs) times the vehicle's designated seating capacity.

Traction

Force exerted by the vehicle on the road via the tires. The amount of grip provided.

Tread

The portion of a tire that comes into contact with the road.

Treadwear indicators

Narrow bands, sometimes called "wear bars" that show across the tread of a tire when only $^{1}/_{16}$ in (1.6 mm) of tread remains.

Uniform Tire Quality Grading Standards

A tire information system that provides consumers with ratings for a tire's traction, temperature and treadwear. Ratings are determined by tire manufacturers using U.S. government testing procedures. The ratings are molded into the sidewall of the tire.

Vehicle maximum load on the tire

Load on an individual tire that is determined by distributing to each axle its share of the maximum loaded vehicle weight and dividing it by two.

Winter driving

Before the onset of winter, have your vehicle winterized at an authorized electric drive smart center.

This service includes:

- Check of anticorrosion and antifreeze concentration.
- Addition of washer concentrate to the water of the windshield/rear window.

  Use a windshield washer concentrate labeled for winter which is formulated for temperatures below freezing point (▷ page 218).
- 12 V battery test. The capacity of the 12 V battery test drops with decreasing ambient temperature.
- Tire change.

Winter tires

⚠ WARNING

Winter tires with a tread depth of less than $^{1}/_{6}$ in (4 mm) must be replaced. They are no longer suitable for winter operation.

Always use winter tires at temperatures below 45°F (7°C) and whenever wintry road conditions prevail. Not all M+S rated tires provide special winter performance. Make sure the tires you use show the mountain/snowflake marking on the tire sidewall. These tires meet specific snow traction performance requirements of the Rubber Manufacturers Association (RMA) and the Rubber Association of Canada (RAC) and have been designed specifically for use in snow conditions. Use of winter tires is the only way to achieve the maximum effectiveness of the ABS and ESP® in winter operation.

For safe handling, make sure all mounted winter tires are of the same make and have the same tread design.

For information on winter tires for your vehicle model, see the "Technical data" section (▷ page 216).

Always observe the speed rating of the winter tires installed on your vehicle. If the maximum speed for which your tires are rated is below the speed rating of your vehicle, you must place a notice to this effect where it will be seen by the driver. Such notices are available at your tire dealer or any authorized electric drive smart center.

Snow chains*

! Remember that snow chains must always be compatible with the tire sizes of a vehicle. Snow chains that are approved by smart are only permitted for the following tire size:

175/55 R15 on the rear axle.

For safety reasons, smart recommends that you only use snow chains that have been approved by smart.

Information on this is available from any smart center.

Please refer to the separate operating instructions for detailed information on mounting the snow chains.

Snow chains should only be driven on snow-covered roads at speeds not to exceed 30 mph (50 km/h). Remove chains as soon as possible when driving on roads without snow.

Please observe the following guidelines when using snow chains:

- Using snow chains is not permissible with all wheel/tire combinations (▷ page 216).
- Use snow chains in pairs and on rear wheels only. Follow the manufacturer's mounting instructions.
- Use of snow chains may be prohibited depending on location. Always check local and state laws before mounting snow chains.

⚠ WARNING

When mounting or removing snow chains, always park your vehicle on level ground, engage the parking brake, and switch off the drive system. The vehicle could otherwise move and injure yourself or other road users.

⚠ WARNING

When mounting and removing snow chains, ensure that you and your vehicle are at a safe distance from moving traffic. Not doing so could endanger other road users or even lead to you being injured by the vehicles behind you.

⚠ WARNING

The vehicle's handling changes when driving with snow chains on any kind of road surface. This means that you should always adapt your driving style to suit the current road and weather conditions.

! If snow chains that do not meet requirements are mounted, they may scrape against the body or axle components when the vehicle is in motion. This could result in damage to the rim/tire or vehicle.

Driving instructions

Drinking and driving

⚠ WARNING

Do not drink alcohol or take drugs and drive or allow anyone to drive who has been drinking alcohol or taking drugs. Even a small amount of alcohol or drugs can affect your reflexes, perceptions and judgment.

The possibility of a serious or even fatal accident are greatly increased when you drink or take drugs and drive.

Pedals

⚠ WARNING

Make sure absolutely no objects are obstructing the pedals' range of motion. Keep the driver's footwell clear of all obstacles. If there are any floormats* or carpets in the footwell, make sure the pedals still have sufficient clearance.

During sudden acceleration or braking maneuvers, the objects could get caught between or beneath the pedals and restrict your ability to brake or accelerate. This could lead to accidents and/or injury.

Power assistance

⚠ WARNING

With the drive system inactive, there is no power assistance for the brake and steering

* optional

▷▷

systems. In this case, it is important to keep in mind that a considerably higher degree of effort is necessary to brake and steer the vehicle. Adapt your driving accordingly.

Brakes

WARNING

Make sure not to endanger any other road users when carrying out braking maneuvers.

Refer to the description of the hydraulic brake assistant (▷ page 48).

! Because the ESP® operates automatically, the ignition must be switched off when the parking brake is being tested on a brake test dynamometer. Active braking action through the ESP® may otherwise seriously damage the brake system which is not covered by the smart Limited Warranty.

Brake pad wear or a leak in the brake system may be the reason for low brake fluid level in the brake fluid reservoir.

The brake fluid level in the brake fluid reservoir may be too low if the brake warning lamp in the instrument cluster comes on (▷ page 23) although the parking brake is released.

Have the brake system inspected immediately. Contact an authorized electric drive smart center.

All checks and service work on the brake system should be carried out by qualified technicians only. Contact an authorized electric drive smart center.

Only install brake pads and use brake fluid recommended by smart.

Inclines

WARNING

Resting your foot on the brake pedal will cause excessive and premature wear of the brake pads.

It can also result in the brakes overheating, thereby significantly reducing their effectiveness and your ability to stop the vehicle in sufficient time to avoid an accident.

Please observe the following guidelines to avoid that the permitted maximum speed is exceeded when driving on downhill grades:

- Do not move the gear selector lever to **N**.
- Recuperation is limited, if:
  - the high-voltage battery is fully charged or too cold
  - the power electronics or the electric motor is overheated.

  When driving down long and steep grades, do not depress the brake pedal permanently. Depress it in intervals instead to reduce the vehicle speed.

High and low stresses

After hard braking, it is advisable to drive on for some time, rather than immediately park, so that the air stream will cool down the brakes faster.

If your brake system is normally only subjected to moderate loads, you should occasionally test the effectiveness of the brakes by applying above-normal braking pressure at higher speeds. This will also enhance the grip of the brake pads.

WARNING

Make sure not to endanger any other road users when carrying out these braking maneuvers.

Wet road surface

WARNING

After driving in heavy rain for some time without applying the brakes or through water deep enough to wet brake components, the first braking action may be somewhat reduced and increased pedal pressure may be necessary to obtain expected braking effect. Maintain a safe distance from vehicles in front.

To help prevent brake disc corrosion after driving on wet road surfaces (particularly salted roads), it is advisable to brake the vehicle with considerable force prior to parking. The heat generated serves to dry the brakes.

WARNING

Make sure not to endanger any other road users when carrying out these braking maneuvers.

Limited braking effect on salted roads

Remember that the effect of the brakes can be limited on salted road surfaces. A layer of salt can form on brake discs and brake pads, considerably reducing the friction between the brake disc and the brake pad. The effect is most noticeable after long trips without braking, e.g. on the highway, and after the vehicle has been parked for several hours.

WARNING

The accumulation of salt on brake discs and brake pads reduces braking effectiveness and increases the distance necessary to come to a complete standstill. This could potentially cause an accident and/or personal injury.

To avoid this risk, you should

- brake carefully every now and then on salted roads in order to remove any layer of salt on the brake disc and brake pad, but do so without endangering any other road users
- keep a good safe distance from the vehicle in front and drive carefully
- press the brake carefully at the end of the trip and again when beginning the next trip in order to remove any salt residues from the brake disc

New brake pads

Only install brake pads recommended by smart.

WARNING

If other than recommended brake pads are installed, or other than recommended brake fluid is used, the braking properties of the vehicle can be degraded to an extent that safe braking is substantially impaired. This could result in an accident.

WARNING

New brake pads will not achieve their optimal braking effect until after several hundred miles (kilometers). This means that you must compensate for the reduced braking effect by pressing harder on the brake pedal and adapt your driving style accordingly. The same applies after brake pads or brake discs have been changed.

Drive sensibly - save energy

Energy consumption, to a great extent, depends on driving habits and operating conditions.

To save energy you should:

- Drive carefully and maintain a suitable distance from the vehicle in front.
- Avoid frequent acceleration and deceleration.
- Keep tires at the recommended inflation pressures.
- Remove carriers* when not in use.

* optional

- Remove unnecessary loads.
- Have all maintenance work performed at the intervals specified in the Maintenance Booklet and as required by the Maintenance System. Contact an authorized electric drive smart center.

Energy consumption is also increased by driving in stop-and-go traffic, on short trips, and in hilly areas.

Tires

⚠ WARNING

If you feel a sudden significant vibration or ride disturbance, or you suspect that possible damage to your vehicle has occurred, you should turn on the hazard warning flashers, carefully slow down, and drive with caution to an area which is a safe distance from the road.

Inspect the tires and the vehicle underbody for possible damage. If the vehicle or tires appear unsafe, have the vehicle towed to the nearest smart center or tire dealer for repairs.

Treadwear indicators (TWI) are required by law. These indicators are located in six places on the tread circumference and become visible at a tread depth of approximately $^{1}/_{16}$ in (1.6 mm), at which point the tire is considered worn and should be replaced.

The treadwear indicator appears as a solid band across the tread.

⚠ WARNING

Although the applicable federal motor vehicle safety laws consider a tire to be worn when the treadwear indicators (TWI) become visible at approximately $^{1}/_{16}$ in (1.6 mm), we recommend that you do not allow your tires to wear down to that level. As tread depth approaches $^{1}/_{8}$ in (3 mm), the adhesion properties on a wet road are sharply reduced.

Depending upon the weather and/or road surface (conditions), the tire traction varies widely.

Specified tire inflation pressures must be maintained. This applies particularly if the tires are subject to high loads (e.g. high speeds, heavy loads, high ambient temperatures).

⚠ WARNING

Do not drive with a flat tire. A flat tire will affect your ability to steer or brake and may cause you to lose control of the vehicle. Continued driving with a flat tire or driving at high speed with a flat tire will cause excessive heat build-up and possibly a fire.

For more information, see “Tires and wheels” (▷ page 127).

Hydroplaning

Depending on the depth of the water layer on the road, hydroplaning may occur resulting in a loss of control, even at low speeds and with new tires. Reduce vehicle speed, avoid track grooves in the road and apply brakes cautiously when it is raining.

Tire traction

The safe speed on a wet, snow covered or icy road is always lower than on a dry road.

You should pay particular attention to the condition of the road whenever the outside temperatures are close to the freezing point.

⚠ WARNING

If ice has formed on the road, tire traction will be substantially reduced. Under such weather conditions, drive, steer and brake with extreme caution.

smart recommends winter tires (▷ page 146) with a minimum tread depth of

approximately $^{1}/_{6}$ in (4 mm) on all four wheels for the winter season to ensure normal balanced handling characteristics. On packed snow, they can reduce your stopping distance compared to summer tires.

Stopping distance, however, is still considerably greater than when the road is not covered with snow or ice. Exercise appropriate caution.

! Avoid spinning of a drive wheel for an extended period when driving off on slippery road surfaces. Otherwise, the drivetrain could be damaged, which is not covered by the smart Limited Warranty.

Tire speed rating

Regardless of the tire speed rating, local speed limits should be obeyed. Use prudent driving speeds appropriate to prevailing conditions.

⚠ WARNING

Even when permitted by law, never operate a vehicle at speeds greater than the maximum speed rating of the tires.

Exceeding the maximum speed for which tires are rated can lead to sudden tire failure, causing loss of vehicle control and possibly resulting in an accident and/or personal injury and possible death, for you and for others.

Make sure your tires have the required tire speed rating as specified for your vehicle in the "Technical data section" (▷ page 216), for example when purchasing new tires.

For information on how to identify the tire speed rating on a tire's sidewall, see "Tire size designation, load and speed rating" (▷ page 140).

If you are uncertain about the correct reading of the information given on a tire's sidewall, any authorized electric drive smart center will be glad to assist you.

i For information on speed ratings for winter tires, see "All-season and winter tires" (▷ page 141).

Winter driving instructions

The most important rule for slippery or icy roads is to drive sensibly and to avoid abrupt acceleration, braking and steering maneuvers.

For information on driving with snow chains*, see "Snow chains*" (▷ page 146).

Road salts and chemicals can adversely affect braking efficiency. Increased pedal force may become necessary to produce the normal braking effect.

Depressing the brake pedal periodically when traveling at length on salt-strewn roads can bring road-salt-impaired braking efficiency back to normal.

If the vehicle is parked after being driven on salt-treated roads, the braking efficiency should be tested as soon as possible after driving is resumed.

⚠ WARNING

Make sure not to endanger any other road users when carrying out these braking maneuvers.

⚠ WARNING

The outside temperature display is not designed to serve as an ice-warning device and is therefore unsuitable for that purpose. Indicated temperatures just above the freezing point do not guarantee that the road surface is free of ice.

For more information, see "Winter driving" (▷ page 146).

* optional

Standing water

Do not drive through flooded areas or water of unknown depth. Before driving through water, determine its depth. Never accelerate before driving into water.

If you must drive through standing water, drive slowly to prevent water from entering

- the front compartment
- the engine compartment
- the passenger compartment

! Water in these areas could cause damage to

- electrical components
- electrical wiring
- the drive system
- the high-voltage battery

Any such damage is not covered by the smart Limited Warranty.

Passenger compartment

⚠ **WARNING**

Always fasten items being carried as securely as possible.

In an accident, during hard braking or sudden maneuvers, loose items thrown around inside the vehicle may injure vehicle occupants.

The cargo compartment is the preferred place to carry objects.

Control and operation of radio transmitters

Radio and telephone

⚠ **WARNING**

Please do not forget that your primary responsibility is to drive the vehicle safely. Only operate the radio or telephone [8] if road, weather and traffic conditions permit.

Bear in mind that at a speed of just 30 mph (approximately 50 km/h), your vehicle is covering a distance of 44 feet (approximately 14 m) every second.

Telephones and two-way radios

⚠ **WARNING**

Never operate radio transmitters equipped with a built-in or attached antenna (i.e. without being connected to an external antenna) from inside the vehicle while the drive system is switched on. Doing so could lead to a malfunction of the vehicle's electronic system, possibly resulting in an accident and/or serious personal injury.

Radio transmitters, such as a mobile phone or a citizens band unit should only be used inside the vehicle if they are connected to an antenna that is installed on the outside of the vehicle.

Refer to the radio transmitter operation instructions regarding use of an external antenna.

Coolant temperature

During severe operating conditions and stop-and-go city traffic, the coolant temperature may rise.

! Excessive coolant temperature causes the red coolant temperature warning lamp in the instrument cluster to come on.

The drive system should not be operated with the red coolant temperature warning lamp illuminated. Doing so may cause serious damage to the drive system and the high-voltage battery, which is not covered by the smart Limited Warranty.

8 Observe all legal requirements.

For more information on coolant temperature warning lamp (▷ page 172).

Driving abroad

Abroad, there is an extensive smart service network at your disposal. If you plan to drive into areas which are not listed in the index of your smart center directory, you should request pertinent information from an authorized electric drive smart center.

Keep in mind, however, that due to the technical requirements of the smart fortwo electric drive and its high-voltage power systems, the vehicle should be serviced only at an authorized electric drive smart center.

If you plan to operate your vehicle in foreign countries, please be aware that:

- Service facilities or replacement parts may not be readily available.
- The AC power sockets in some countries, especially overseas, require different plugs on the charging cable.
- Charging stations may not be available.

Symmetrical low beams

If you drive in countries where vehicles drive on the other side of the road than the country in which the vehicle is registered, you must have the headlamps modified for symmetrical low beams. Relevant information can be obtained at any authorized electric drive smart center.

Vehicle care

Care tips

Regular and proper care will help to maintain the value of your vehicle. The best way to protect your vehicle from harmful environmental influences is to wash it and use protective treatments regularly.

smart recommends that you care for the paintwork at least twice a year (e.g. in the spring and autumn).

WARNING

Many cleaning products can be hazardous. Some are poisonous, others are flammable. Always follow the instructions on the particular container. Always open your vehicle's doors or windows when cleaning the inside.

Never use fluids or solvents that are not designed for cleaning your vehicle.

Always lock away cleaning products and keep them out of reach of children.

Follow the care tips. Wash your vehicle preferably by hand.

While in operation or even while parked, your vehicle is subjected to varying external influences, which left unchecked can attack the paint as well as the vehicle underbody and lead to permanent damage.

Such damage is caused not only by extreme and varying climatic conditions, but also by:

- Air pollution
- Road salt
- Tar
- Gravel and stone chipping

To avoid paint damage, you should immediately remove:

- Insects
- Bird droppings
- Tree sap, etc.
- Grease and oil
- Brake fluid
- Coolant
- Fuel
- Tar spots

Failure to remove such dirt immediately can cause damage to the paint or the

soft top fabric*. Environmental influences are not covered by the smart Limited Warranty.

Frequent washing reduces and/or eliminates the aggressiveness and potency of the above adverse influences.

More frequent washings are necessary to deal with unfavorable conditions:

- near the ocean
- in industrial areas (smoke, exhaust emissions)
- during winter operation

You should check your vehicle from time to time for stone chipping or other damage. Any damage should be repaired as soon as possible to prevent corrosion.

In doing so, do not neglect the underbody of the vehicle. A prerequisite for a thorough check is a washing of the underbody followed by a thorough inspection. Damaged areas need to be re-undercoated.

Your vehicle has been treated at the factory with a wax-base rustproofing in the body cavities which will last for the lifetime of the vehicle. Post-production treatment is neither necessary nor recommended by smart because of the possibility of incompatibility between materials used in the production process and others applied later.

We have selected vehicle-care products and compiled recommendations which are specially matched to our vehicles and which always reflect the latest technology. You can obtain smart approved vehicle-care products at an authorized electric drive smart center.

Scratches, corrosive deposits, corrosion or damage due to negligent or incorrect care cannot always be removed or repaired with the vehicle-care products recommended here. In such cases it is best to seek aid at an authorized electric drive smart center.

The following topics deal with the cleaning and care of your vehicle and give important "how-to" information as well as references to smart approved vehicle-care products.

Vehicle care

Contact an authorized electric drive smart center for recommended and approved care products.

Advice on caring for the soft top system, see (▷ page 157).

WARNING

After washing the vehicle, the brakes may still be wet and thus their functionality impaired. Therefore, when you start off, brake lightly several times without endangering traffic.

* optional

Selecting the right cleaning agent

! To avoid damage to interior equipment and materials: Never rub roughly or use cleaning spirits on the cloth upholstery, never use strong agents, stain remover etc. on the leather upholstery. Never scour or use solvent on plastic parts. Never use strong and aggressive agents on windows, do not touch the inside of the windows with hard objects such as an ice scraper or ring, doing so may damage the windows.

Interior	Special considerations	Light soiling	Heavy soiling
Cloth upholstery	Use a clean, lint-free cloth	Light soap suds	Stain remover (test on an inconspicuous place first)
Plastic parts	Use a color-fast cloth	Damp, clean cloth, cockpit spray	Damp, clean cloth, cockpit spray
Leather upholstery	Use a clean, color-fast cloth	Clean cloth with lukewarm water, leather care product	Leather care product
Windows		Damp, clean cloth, microfiber cloth, glass cleaner	Microfiber cloth, glass cleaner

! To avoid damage to exterior surfaces never do the following: Use aggressive paint cleaner, machine polish, abrasive cleanser, acidic, highly alkaline agents, abrasive sponges, high-pressure or hot water cleaning equipment.

Exterior	Special considerations	Lightly soiled Hand-/Automatic car washes	Heavily soiled Hand-/Automatic car washes
tridion safety cell, black	Powder coated single-coat paint finish	Car shampoo concentrate, insect remover for insect remains, polish	Car shampoo concentrate, hard wax, insect remover for insect remains, polish
tridion safety cell, silver	Powder coated single-coat paint finish and clearcoat		
Highly polished plastic parts (body panels)	Body panels with base coat and clearcoat or clearcoat only		

Exterior	Special considerations	Lightly soiled Hand-/Automatic car washes	Heavily soiled Hand-/Automatic car washes
Wheels and wheel covers	Two-layer metallic paint (high-gloss)	Car shampoo concentrate, rim care	Car shampoo concentrate, rim care
Retractable soft top	PAC fabric	Car shampoo concentrate, soft top cleaner, impregnation spray	Car shampoo concentrate, soft top cleaner, impregnation spray

Removing insects

Remove insect remains before you start to wash the vehicle.

- ▶ Spray insect remover on.
- ▶ Allow insect remover to work in briefly.
- ▶ Rub in gently with a soft cloth or sponge.
- ▶ Rinse with plenty of water.
- ▶ Treat the cleaned surface with hard wax.

Removing tar

Remove any tar marks before washing the vehicle.

- ▶ Apply tar remover with a soft cloth.
- ▶ Allow tar remover to work in briefly.
- ▶ Rub in gently.
- ▶ Rinse with plenty of water.
- ▶ Treat the cleaned surface with hard wax.

Vehicle washing

In the winter, thoroughly remove all traces of road salt as soon as possible.

When washing the vehicle underbody, do not forget to clean the inner sides of the wheels.

Washing your vehicle by hand

- ▶ Wash the vehicle using car shampoo concentrate and a sponge.
- ▶ Rinse with clean water.
- ▶ Towel dry the vehicle.

❗ Do not wash the vehicle in direct sunlight. The body panel surfaces and paint finish may be damaged.

Washing your vehicle in an automatic car wash

ⓘ When running your vehicle through an automatic car wash, water droplets can run down the inside of the side windows.

Unscrew your vehicle's antenna before driving into an automatic car wash.

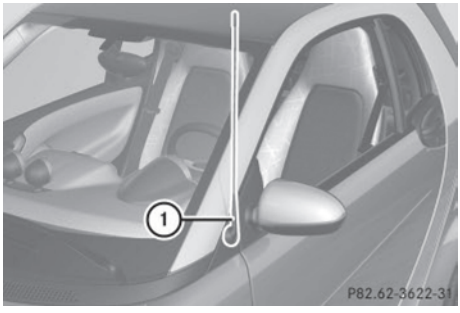

- ▶ **Removing:** Unscrew antenna ① counterclockwise.
- ▶ **Fitting:** Screw antenna ① in clockwise.

Power washer

⚠ **WARNING**

Do not use a round nozzle (dirt grinders) to powerwash your vehicle, in particular the tires. You could otherwise damage the tires and cause an accident.

! Do not aim directly at

- electrical parts
- electrical connectors
- seals
- other rubber parts

The distance should be at least 3.9 in (10 cm) and the water temperature must not exceed 140°F (60°C). Follow the instructions provided by the power washer manufacturer on maintaining a distance between the vehicle and the nozzle of the power washer.

Always keep the jet of water moving across the surface.

! Powerwashing could damage

- the high-voltage battery
- the drive system
- the engine compartment

Do not powerwash these components.

Decorative foils

! Decorative foils are permanently adhered to the painted parts of the vehicle and cannot be removed.

! Do not expose the foils to solvents, gasoline or diesel.

i When cleaning with a power washer, note the following guideline values:

- Water temperature max. 176°F (80°C)
- Minimum distance 11.8 in (30 cm)
- Jet of water strike at a right angle

Paintwork care

The frequency with which you care for your paintwork is dependent on

- how much the vehicle is used
- where you normally park the vehicle (e.g. in a garage or under a tree)
- the season
- weather and environmental influences

Rectifying paintwork damage

You can use a touch-up paint pen to repair minimal stone chip damage and scratches.

Recommended touch-up paint pens can be obtained in a smart center.

i For any major paintwork damage, please contact a smart center.

Exterior	Repair options
Plastic parts (body panels) with clearcoat	Clearcoat touch-up paint pen
Body panels with base coat and clearcoat	recommended touch-up paint pen set in the relevant color
tridion safety cell	recommended touch-up paint pen set in the relevant color

Soft top system (cabriolet only)

Regular care will protect the retractable soft top and the rear soft top against external influences, helping to preserve its value. Use only an approved soft top cleaner when removing dirt from the soft top.

! Never clean the soft top using a power washer, as water could get into the inside of the vehicle.

Cleaning the soft top fabric

! Only clean the retractable soft top and the rear soft top when they are closed.

Dry cleaning

▶ Brush the soft top fabric with a soft brush, always working in the same direction, i.e. from front to back.

Wet cleaning

smart recommends that you use an approved car shampoo concentrate and soft top cleaner.

- ▶ "Dry clean" the vehicle first.
- ▶ Wash the soft top off using a soft brush or sponge and plenty of lukewarm water.
- ▶ Then rinse thoroughly with clear water.

ⓘ If you have the vehicle cleaned in a car wash, you may find that some water gets into the interior.

Where will I find ... 160
Display messages ... 161
What to do if ... 166
Unlocking/locking manually ... 177
Replacing transmitter battery ... 178
Replacing bulbs ... 179
Replacing wiper blades ... 185
Flat tire ... 187
Wheel change ... 195
Batteries ... 197
Jump starting ... 200
Towing ... 203
Fuses ... 205

Where will I find ...

Tire repair kit

The tire repair kit is located in the passenger footwell under the carpet.

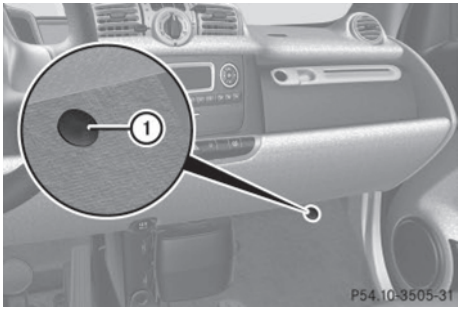

- ▶ Insert a suitable object such as a coin into the slot of carpet holder ①.
- ▶ Turn carpet holder ① counterclockwise.
- ▶ Lift the carpet.

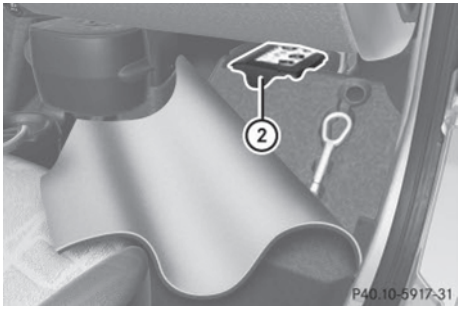

② Tire repair kit

The following is included:

- Tire sealant container
- Electric air pump with filler hose
- Sticker
- Operating instructions label (on the inside of the tire repair kit lid)

ⓘ The tire sealant container is located below the tire repair kit.

⚠ **WARNING**

The tire repair kit is a limited repair device. In case of a breakdown caused by a flat tire, read through the section flat tire carefully. When using the tire repair kit follow the instructions in this section. Failure to follow these instructions can result in severe injury or death.

Display messages

The following display messages appear in the multifunction display (▷ page 83).

You can confirm certain display messages.

▶ **Confirming messages:** Press the OK button on the control lever briefly (▷ page 83).

Display messages	Possible causes/consequences and ▶ Solutions
 Switch Off Engine	The coolant is too hot. In addition, the warning lamp in the instrument cluster lights up and a warning signal sounds. ▶ Stop the vehicle immediately as soon as it is safe to do so. ▶ Switch off the drive system immediately. ▶ Engage the parking brake. ▶ Make sure the air supply for the radiator is uninterrupted. ▶ Only start the drive system again after the display message disappears. You could otherwise damage the drive system.
 Release Parking Brake	You are driving with the parking brake engaged. In addition, the BRAKE (USA only), (Canada only) warning lamp in the instrument cluster lights up and a warning signal sounds. ▶ Release the parking brake.
 Brake System See Operator's Manual	There is a slight malfunction in the vacuum supply of the braking system. ▶ When braking, continue to depress the brake pedal. ▶ Contact an authorized electric drive smart center.
 Brake Malfunction ➡Service Required	There is a serious malfunction in the vacuum supply of the braking system. In addition, a warning signal sounds. ▶ Contact an authorized electric drive smart center.
 Shift to N or P to Start	You have attempted to start the engine while the automatic transmission was in reverse gear **R** or drive position **D**. ▶ Shift the automatic transmission into park position **P** or neutral position **N**. ▶ Make sure that **N** or **P** is shown in the multifunction display.

Display messages	Possible causes/consequences and ▶ Solutions
! Transmission Not in P	The driver's door is open and the gear selector lever is in position **R**, **N** or **D**. In addition, a warning signal sounds. ▶ Move the gear selector lever to **P**.
! Malfunction Serv. Req.	There is a malfunction in the coolant compressor or in the heating/coolant circuit. ▶ Contact an authorized electric drive smart center.
! Battery Power Too Low	The outside temperature is too low. The full battery capacity is not available. The vehicle does not start. ▶ Charge the high-voltage battery (▷ page 112).
High-voltage Battery at Reserve Level	The high-voltage battery has reached reserve level. ▶ Charge the high-voltage battery (▷ page 112).
Charge HV Battery Immediately	The charge level of the high-voltage battery is below 5 %. In addition, a warning signal sounds. ▶ Charge the high-voltage battery (▷ page 112).
Engine Restart Not Possible	There is a serious malfunction in the drive system. The drive system can no longer be started. In addition, a warning signal sounds. ▶ Do not restart the drive system. ▶ Contact an authorized electric drive smart center.
High-Voltage System ➡Service Required	There is a malfunction in the drive system, the electric motor or the high-voltage battery. There is a high-voltage safety problem. In addition, the warning lamp in the instrument cluster lights up and a warning signal sounds. ▶ Contact an authorized electric drive smart center.
Reduce ➡Speed	The vehicle speed exceeds 84 mph (135 kmh). In addition, a warning signal sounds. ▶ Reduce the speed. The message disappears.

Display messages	Possible causes/consequences and ▶ Solutions
Drive System ➡Service Required	There is a malfunction in the drive system, the electric motor or the high-voltage battery. In addition, the yellow warning lamp in the instrument cluster lights up. ▶ Contact an authorized electric drive smart center.
Drive System ➡Switch Engine Off	There is a malfunction in the drive train. If the drive system continues to run, the drive train can become damaged. In addition, the red warning lamp in the instrument cluster lights up and a warning signal sounds. ▶ Switch off the drive system. ▶ Do not continue driving. ▶ Contact an authorized electric drive smart center.
Do Not Tow (Away)	Either the drive or the high-voltage system is faulty. In addition, the warning lamp in the instrument cluster lights up. ▶ It is recommended to have the vehicle transported by a qualified specialist workshop. Do **not** tow the vehicle on its own wheels.
Charging Not Possible	There is a malfunction in the on-board charger. The high-voltage battery cannot be charged. ▶ Contact an authorized electric drive smart center.
Parking Lock Inactive	The gear selector lever is in position **P**, but the parking lock is not detected. In addition, a warning signal sounds. ▶ Apply the parking brake. ▶ Move the gear selector lever to another position, e.g. to **R**. ▶ Move the gear selector lever to **P** again.
Driver´s Door Ajar	The driver's door is open. ▶ Close the driver's door.
Door Ajar	The passenger door is open. ▶ Close the passenger door.
Tailgate Open	A tailgate or the rear soft top[9] is open. ▶ Close the tailgates or the rear soft.

9 cabriolet only.

Display messages	Possible causes/consequences and ▶ Solutions
Charge Cable Connected	The charging cable is inserted in the vehicle power socket. The vehicle cannot be moved. In addition, a warning signal sounds. ▶ To drive off, remove the charging cable from the vehicle power socket and stow the cable in the vehicle.
Ready to Charge	The vehicle is prepared for the high-voltage battery to be charged. It may take 30 seconds for the charging process to begin.
Malfunction	Despite the charging cable being correctly inserted in the vehicle power socket, the high-voltage battery does not charge. There is a malfunction in the on-board charger. ▶ Contact an authorized electric drive smart center.
No Charge	The voltage on the vehicle power socket is too low. ▶ Check whether the charging cable is inserted correctly in the power sockets of both the vehicle and the power source. If necessary, unplug the charging cable from both sockets and reinsert it. If, afterwards, the message is still displayed: ▶ Contact an authorized electric drive smart center.

Display messages	Possible causes/consequences and ▶ Solutions
Check Tire Pressure	The tire inflation pressure in at least one tire is significantly below the reference value. ▶ Carefully bring the vehicle to a halt, avoiding abrupt steering and braking maneuvers. ▶ Check and adjust tire inflation pressure as required (▷ page 130). ▶ If necessary, change the wheel (▷ page 195).

⚠ **WARNING**

Each tire should be checked monthly when cold and inflated to the inflation pressure recommended by the vehicle manufacturer on the Tire and Loading Information placard. If your vehicle has tires of a different size than the size indicated on the Tire and Loading Information placard, you should determine the proper tire inflation pressure for those tires.

As an added safety feature, your vehicle has been equipped with a tire pressure monitoring system (TPMS) that illuminates a low tire pressure telltale when one or more of your tires is significantly underinflated.

Accordingly, when the low tire pressure telltale illuminates, you should stop and check your tires as soon as possible, and inflate them to the proper pressure. Driving on a significantly underinflated tire causes the tire to overheat and can lead to tire failure.

Underinflation also reduces fuel efficiency and tire tread life, and may affect the vehicle's handling and stopping ability. Please note that the TPMS is not a substitute for proper tire maintenance, and it is the driver's responsibility to maintain correct tire pressure, even if underinflation has not reached the level to trigger illumination of the TPMS low tire pressure telltale.

Your vehicle has also been equipped with a TPMS malfunction indicator to indicate when the system is not operating properly. The TPMS malfunction indicator is combined with the low tire pressure telltale. When the system detects a malfunction, the telltale will flash for approximately 1 minute and then remain continuously illuminated.

This sequence will continue upon subsequent vehicle start-ups as long as the malfunction exists. When the malfunction indicator is illuminated, the system may not be able to detect or signal low tire pressure as intended.

TPMS malfunctions may occur for a variety of reasons, including the installation of incompatible replacement or alternate tires or wheels on the vehicle that prevent the TPMS from functioning properly. Always check the TPMS malfunction telltale after replacing one or more tires or wheels on your vehicle to ensure that the replacement or alternate tires and wheels allow the TPMS to continue to function properly.

Display messages	Possible causes/consequences and ▶ Solutions
Danger: Ice (Canada only)	The outside temperature is below 3°C. The road may be icy. ▶ Adjust your driving style to the prevailing road and weather conditions. ▶ **Confirming message:** Press the OK button on the control lever briefly (▷ page 83).

⚠ WARNING

The display message Danger: Ice is not designed as an ice-warning device and is therefore unsuitable for that purpose.

Indicated temperatures just above the freezing point do not guarantee that the road surface is free of ice. The road may still be icy, especially in wooded areas or on bridges. Your vehicle could start to skid if you do not adjust your driving style accordingly.

Therefore, always adjust your driving style to the prevailing road and weather conditions.

Warning and indicator lamps in the instrument cluster

General information

If any of the following lamps in the instrument cluster fails to come on during the bulb self-check when switching on ignition (▷ page 57), have the respective bulb checked and replaced if necessary.

Brake

Problem	Possible causes/consequences and ▶ Solutions
ABS (USA only) (ABS) (Canada only) The ABS indicator lamp illuminates while the drive system is running.	There is a malfunction in the ABS system. ▶ Have the ABS system checked at an authorized electric drive smart center immediately.
ABS (USA only) (ABS) (Canada only) The ABS indicator lamp illuminates together with the brake warning lamp BRAKE (USA only) or (!) (Canada only) while the drive system is running.	The ABS system fails. ▶ Stop the vehicle immediately in a safe location. ▶ Do **not** continue to drive. ▶ Switch off the drive system. ▶ Engage the parking brake when leaving the vehicle. ▶ Contact Roadside Assistance or an authorized electric drive smart center.

⚠ WARNING

When the ABS system is malfunctioning, the wheels may lock during hard braking, reducing steering capability and extending the braking distance.

When the ABS is switched off due to a malfunction, the ESP® is also switched off. The basic driving and braking functions are still available.

The risk of your vehicle skidding is then increased in certain situations. You should therefore always adapt your speed and driving style to the prevailing road and weather conditions.

Problem	Possible causes/consequences and ▶ Solutions
BRAKE (USA only) (!) (Canada only) The brake warning lamp illuminates while the drive system is running.	You are driving with the parking brake engaged. ▶ Release the parking brake.
	The brake circuit fails or the brake fluid level in the brake fluid reservoir is too low. ▶ Stop the vehicle immediately in a safe location. ▶ Do **not** continue to drive. ▶ Switch off the drive system. ▶ Do not add brake fluid as this will not solve the problem. ▶ Engage the parking brake when leaving the vehicle. ▶ Contact Roadside Assistance or an authorized electric drive smart center.

⚠ **WARNING**

Driving with the brake warning lamp illuminated can result in an accident. Have your brake system checked immediately if the brake warning lamp stays on.

Do not add brake fluid before checking the brake system.

! If you find that the brake fluid in the brake fluid reservoir has fallen to the minimum mark or below, have the brake system checked for brake pad thickness and leaks immediately. Contact an authorized electric drive smart center immediately. Do not add brake fluid as this will not solve the problem.

Safety systems

Problem	Possible causes/consequences and ▶ Solutions
The seat belt telltale illuminates constantly for a maximum of 6 seconds after starting the drive system.	Regardless of whether the seat belt is fastened or not, the seat belt telltale always comes on and remains lit for 6 seconds after starting the drive system. ▶ Fasten your seat belts.
The seat belt telltale illuminates constantly. An additional warning chime sounds for a maximum of 6 seconds after starting the drive system.	The driver's seat belt is unfastened. ▶ Fasten your seat belts.
The seat belt telltale flashes with increasing frequency of a warning chime for a maximum of 60 seconds.	The vehicle speed once exceeds 15 mph (25 km/h), and both the driver's and passenger seat belt are unfastened. ▶ Fasten your seat belts. If the driver's or the passenger seat belt remains unfastened after 60 seconds, the warning chime stops sounding. The seat belt telltale stops flashing but continues to be illuminated. The seat belt telltale will only go out if both the driver's and the passenger seat belt (with the passenger seat occupied) are fastened, or the vehicle is standing still and a door is opened.

Problem	Possible causes/consequences and ▶ Solutions
Scenario 1: The SRS indicator lamp illuminates when the ignition is switched on and goes out after a maximum of 4 seconds.	The subsequent self check of the safety systems detected no malfunction. The supplemental restraint system is operational.
Scenario 2: The SRS indicator lamp illuminates when the ignition is switched on and goes out after a maximum of 4 seconds for approximately 1 second, then it comes on again and stays on.	There is a malfunction in the supplemental restraint systems. The air bags or Emergency Tensioning Devices could deploy unexpectedly or fail to deploy in an accident. ▶ Do not sit on the passenger seat; this applies particularly to children. ▶ Have the system checked at an authorized electric drive smart center.

⚠ WARNING

If the SRS indicator lamp does not come on when you switch on the ignition or does not go out again after a few seconds once the drive system is running or comes on again, the supplemental restraint systems are malfunctioning.

In the event that a malfunction of the SRS is indicated as described in scenario 2, the SRS may not be operational. For your safety, we strongly recommend that you contact an authorized electric drive smart center immediately to have the system checked; A malfunctioning SRS system may not deploy when needed in an accident resulting in serious or fatal injury, or it might deploy unexpectedly and unnecessarily which could result in an accident and/or injury to you or to others.

! If the SRS indicator lamp comes on while driving, have the system checked at an authorized electric drive smart center immediately.

It is possible that the air bag and the emergency tensioning device could be activated unintentionally or will not function in the event of an accident.

i Information on the operating principle of the air bags can be found in the "Safety" section (▷ page 33).

Problem	Possible causes/consequences and ▶ Solutions
The ESP® warning lamp flashes while driving.	The ESP® has engaged because of detected traction loss in at least one tire. ▶ When driving off, apply as little throttle as possible. ▶ While driving, ease up on the accelerator pedal. ▶ Adapt your speed and driving to the prevailing road and weather conditions.
The ESP® warning lamp illuminates continuously while the drive system is running.	The ESP® is not operational due to a system failure. ▶ Have the system checked at an authorized electric drive smart center.
	The ESP® is not available. ▶ Have the system checked at an authorized electric drive smart center.

⚠ WARNING

When the ESP® warning lamp is illuminated continuously, the ESP® is not available or not operational due to a system failure.

Adapt your speed and driving to the prevailing road conditions and the non-operating status of the ESP®.

ⓘ It may be possible to clear a system failure by restarting the drive system.

▶ Restart the drive system.
If the warning lamp still does not go out, have the system checked at an authorized electric drive smart center immediately.

ⓘ More information on the ESP® can be found in the "Safety" section (▷ page 47).

Problem	Possible causes/consequences and ▶ Solutions
The yellow EPS warning lamp illuminates while the drive system is running.	The Electronic Power Steering (EPS)* is not available. ▶ Have the EPS checked at an authorized smart electric drive center immediately.

⚠ WARNING

When the EPS is not available a higher degree of effort is necessary to steer the vehicle. Have the system checked at an authorized electric drive smart center.

* optional

Vehicle

Problem	Possible causes/consequences and ▶ Solutions
The red 12-V-battery indicator lamp illuminates while driving or does not go out after the drive system is started.	The 12-V-battery is not being charged. ▶ Stop the vehicle immediately in a safe location. ▶ Do **not** continue to drive. ▶ Switch off the drive system. ▶ Engage the parking brake when leaving the vehicle. ▶ Contact Roadside Assistance or an authorized electric drive smart center.
The yellow high-voltage battery warning lamp comes on while driving.	There may be a malfunction in the high-voltage system. Contact an authorized electric drive smart center immediately and have the high-voltage system checked.
The high-beam headlamp indicator lamp does not illuminate when the high-beam headlamps are switched on or when using the high-beam flasher.	The high-beam headlamp indicator lamp has failed. ▶ Have the high-beam headlamp indicator lamp checked at an authorized electric drive smart center.
The low-beam headlamp indicator lamp does not illuminate when the low-beam headlamps are switched on.	The low-beam headlamp indicator lamp has failed. ▶ Have the low-beam headlamp indicator lamp checked at an authorized electric drive smart center.

Problem	Possible causes/consequences and ▶ Solutions
The turn signal indicator lamp(s) do(es) not illuminate when the ignition is switched on and the corresponding turn signal is switched on or the hazard warning flasher is switched on.	The turn signal indicator lamp(s) has (have) failed. ▶ Have the turn signal indicator lamp(s) checked at an authorized electric drive smart center.
The turn signal indicator lamp(s) flashes at double frequency.	One of the turn signals is malfunctioning. ▶ Replace the bulb as soon as possible (▷ page 180). or ▶ Have the turn signal checked at an authorized electric drive smart center as soon as possible.

Drive system

Problem	Possible causes/consequences and ▶ Solutions
The red coolant temperature warning lamp illuminates.	The coolant is too hot. The high-voltage battery and/or the drive system are not cooled sufficiently. ▶ Stop the vehicle immediately in a safe location. ▶ Switch off the drive system. ▶ Engage the parking brake when leaving the vehicle. ▶ Contact Roadside Assistance or an authorized electric drive smart center.

Problem	Possible causes/consequences and ▶ Solutions
The yellow drive diagnostics indicator lamp comes on while driving.	There may be a malfunction in the drive system. ▶ Have the vehicle checked at an authorized electric drive smart center immediately.
The red drive diagnostics warning lamp comes on while driving.	There may be a malfunction in the drive system. ▶ Stop the vehicle immediately in a safe location. ▶ Do **not** continue to drive. ▶ Switch off the drive system. ▶ Engage the parking brake when leaving the vehicle. ▶ Contact Roadside Assistance or an authorized electric drive smart center.

Tire Pressure Monitoring System (TPMS)*

Problem	Possible causes/consequences and ▶ Solutions
The yellow combination low tire pressure/ TPMS malfunction telltale illuminates continuously.	The TPMS detects a loss of pressure in at least one tire. ▶ Carefully bring the vehicle to a halt, avoiding abrupt steering and braking maneuvers. Observe the traffic situation around you. ▶ Check and correct tire inflation pressure as required (▷ page 129). If the tire inflation pressure in the respective tire(s) has (have) been corrected, the combination low tire pressure/TPMS malfunction telltale goes out after a few minutes of driving. See also "Restarting the TPMS" (▷ page 132).
The combination low tire pressure/TPMS malfunction telltale flashes 60 seconds and then stays illuminated.	There is a malfunction in the TPMS. ▶ Have the TPMS checked at an authorized electric drive smart center. After the malfunction has been remedied the combination low tire pressure/TPMS malfunction telltale goes out after a few minutes of driving.

⚠ WARNING

Each tire should be checked monthly when cold and inflated to the inflation pressure recommended by the vehicle manufacturer on the Tire and Loading Information placard. If your vehicle has tires of a different size than the size indicated on the Tire and Loading Information placard, you should determine the proper tire inflation pressure for those tires.

* optional

▷▷

As an added safety feature, your vehicle has been equipped with a tire pressure monitoring system (TPMS) that illuminates a low tire pressure telltale when one or more of your tires is significantly underinflated.

Accordingly, when the low tire pressure telltale illuminates, you should stop and check your tires as soon as possible, and inflate them to the proper pressure. Driving on a significantly underinflated tire causes the tire to overheat and can lead to tire failure.

Underinflation also increases energy consumption, reduces tire tread life, and may affect the vehicle's handling and stopping ability. Please note that the TPMS is not a substitute for proper tire maintenance, and it is the driver's responsibility to maintain correct tire pressure, even if underinflation has not reached the level to trigger illumination of the TPMS low tire pressure telltale.

Your vehicle has also been equipped with a TPMS malfunction indicator to indicate when the system is not operating properly. The TPMS malfunction indicator is combined with the low tire pressure telltale. When the system detects a malfunction, the telltale will flash for approximately 1 minute and then remain continuously illuminated.

This sequence will continue upon subsequent vehicle start-ups as long as the malfunction exists. When the malfunction indicator is illuminated, the system may not be able to detect or signal low tire pressure as intended.

TPMS malfunctions may occur for a variety of reasons, including the installation of incompatible replacement or alternate tires or wheels on the vehicle that prevent the TPMS from functioning properly. Always check the TPMS malfunction telltale after replacing one or more tires or wheels on your vehicle to ensure that the replacement or alternate tires and wheels allow the TPMS to continue to function properly.

Warning and indicator lamps in the overhead control panel

Problem	Possible causes/consequences and ▶ Solutions
PASS AIR BAG OFF The passenger front air bag off indicator lamp illuminates and remains illuminated with the weight of a typical adult or someone larger than a small individual on the passenger seat.	There is a malfunction in the system. ▶ Have the system checked at an authorized electric drive smart center.
PASS AIR BAG OFF The passenger front air bag off indicator lamp does not illuminate or remains out with the weight of a typical 12-month-old child in a standard child restraint or less on the passenger seat	There is a malfunction in the system. ▶ Have the system checked at an authorized electric drive smart center.

⚠ WARNING

If the PASS AIR BAG OFF indicator lamp illuminates and remains illuminated with the weight of a typical adult or someone larger than a small individual on the passenger seat, do not have any passenger use the passenger seat until the system has been repaired.

⚠ WARNING

If the PASS AIR BAG OFF indicator lamp does not illuminate or remains out with the weight of a typical 12-month-old child in a standard child restraint or less on the passenger seat, do not transport a child on the passenger seat until the system has been repaired.

Loss of key

Problem	Possible causes/consequences and ▶ Solutions
You lose a key.	▶ Have the key deactivated at an authorized electric drive smart center. ▶ Report the loss of the key to your car insurance company immediately. ▶ If necessary, have the mechanical lock replaced. Your authorized electric drive smart center will be glad to supply you with a replacement following an identity check.

Acoustic warning signals

Problem	Possible causes/consequences and ▶ Solutions
A warning signal sounds while driving.	You are driving with the parking brake engaged. ▶ Release the parking brake (▷ page 77).
A warning signal sounds when opening the driver's door.	You have opened the driver's door while the exterior lighting is still switched on. ▶ Turn the exterior lamp switch to position **0**.
A warning signal sounds.	The door is opened while a gear is engaged with the drive system running and neither the brake nor accelerator pedals are depressed. ▶ Close the driver's and passenger door. ▶ Move the gear selector lever to park position **P**. or ▶ Switch off the drive system.
	You open the driver's door with the key in starter switch position **0** to remind you not to leave the key in the vehicle. ▶ Close the driver's door. or ▶ Remove the key from the starter switch.
A warning signal sounds.	The seat belts are not fastened when the drive system is started. For details, see seat belt telltale (▷ page 168). ▶ Fasten your seat belts.

Problem	Possible causes/consequences and ▶ Solutions
A warning signal sounds when parking.	You have not engaged the parking brake before releasing the brake pedal and switching off the drive system. ▶ Switch on the ignition to deactivate the acoustic warning. ▶ Engage the parking brake. ▶ Make sure the gear selector lever is in park position **P**. ▶ Turn the key to starter switch position **0**. ▶ Remove the key from the starter switch. For safety, it is important that you perform the parking procedure as described (▷ page 77).
You can hear a continuous noise from the front axle when braking.	The vehicle is equipped with a mechanical/acoustic brake pad indicator. ▶ Have the brake pads checked at an authorized electric drive smart center.

Unlocking/locking manually

Unlocking the vehicle

You can unlock the driver's door and the charge socket flap by unlocking the driver's door using the key. The lock cylinder is fitted with a cap.

▶ Press button ⓐ on the key.

ⓘ For replacing the transmitter battery (▷ page 178).

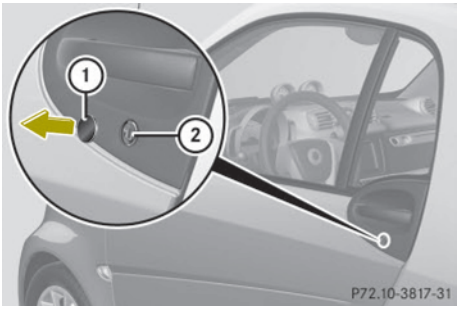

▶ Remove cap ① from lock cylinder ②.

▶ Unlock the driver's door.
The driver's door and the charge socket flap are unlocked.

ⓘ To unlock the vehicle centrally press the central unlocking switch in the upper center console (▷ page 27).

Locking the vehicle

If you can no longer lock the vehicle using the remote control and you do not have a spare transmitter battery at hand, please proceed as follows:

▶ Open the driver's door.

▶ Press the central locking switch (▷ page 53).
The indicator lamp on the central locking switch comes on, when the starter switch is in position **1**.

The indicator lamp on the central locking switch flashes, when the starter switch is in position **0**.

▶ Remove the key from the starter switch, take it with you, and close all doors.
The vehicle is now locked.

Closing the rear soft top

If the rear soft top does not lock properly after being closed, proceed as follows:

- ▶ Stop the vehicle in a safe location.
- ▶ Engage the parking brake.
- ▶ Make sure the key is in starter switch position **1**.
- ▶ Fold up the rear soft top completely. The rear soft top stops in the unlocked position.
- ▶ Within one minute, press and hold symbol on the retractable soft top switch for 15 seconds twice. The rear soft top closes the locking hooks.
- ▶ Close the retractable soft top completely.
- ▶ Have the rear soft top checked at an authorized electric drive smart center.

Replacing transmitter battery

Notes

The remote control's transmitter battery is almost spent when the turn signals flash rapidly nine times in a row when locking the vehicle.

If you do not replace the transmitter battery, after about 100 more times you will no longer be able to lock or unlock the vehicle using the remote control.

- ▶ Replace the transmitter battery.

or

- ▶ Have the transmitter battery replaced at an authorized electric drive smart center.

WARNING

Batteries contain poisonous and corrosive substances. Therefore keep the batteries out of reach of children.

If a battery is swallowed, seek medical help immediately.

Batteries contain materials that can harm the environment if disposed of improperly. Recycling of batteries is the preferred method of disposal. Many states/provinces require sellers of batteries to accept old batteries for recycling.

Replacing battery

Replacement battery: CR 2016 button cell

Replace the remote control's transmitter battery every two years at the latest. Otherwise there is a danger of leakage. The remote control could be damaged.

- ▶ Insert a suitable object such as a coin into the slot at the eyelet of the key housing.
- ▶ Carefully turn the coin until key housing top half ① is unlatched.
- ▶ Open key housing top half ① to the side.

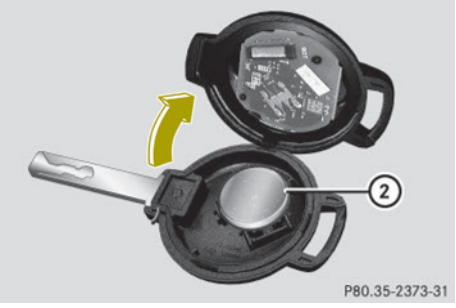

- ▶ Remove transmitter battery ② from the board.

Check the polarity when inserting the new transmitter battery. You could otherwise damage parts of the electrical system. When inserting the batteries, make sure they are clean and free of lint.

- Insert the new transmitter battery.
- Press both halves of the key housing together again.
- Check the operation of the remote control.

Replacing bulbs

About replacing bulbs

Safe vehicle operation depends on proper exterior lighting and signaling. It is therefore essential that all bulbs and lamp assemblies are in good working order at all times.

Correct headlamp adjustment is extremely important. Have headlamps checked and readjusted at regular intervals and when a bulb has been replaced. Contact an authorized electric drive smart center for headlamp adjustment.

WARNING

Bulbs and bulb sockets can be very hot. Allow the lamp to cool down before changing a bulb. Otherwise you could be burned if you touch them.

Keep bulbs out of the reach of children.

Halogen lamps contain pressurized gas. A bulb can explode if you:

- touch or move it when hot
- drop the bulb
- scratch the bulb

Wear eye and hand protection.

If the headlamps or front fog lamps* are fogged up on the inside as a result of high humidity, driving the vehicle a distance with the lights on should clear up the fogging.

Notes on bulb replacement:

- Only use bulbs of the same type and with the specified watt rating.
- Switch the lights off before replacing a bulb to prevent short circuits.
- Always use a clean lint-free cloth when handling bulbs.
- Your hands should be dry and free of oil and grease.
- Avoid touching the glass of the bulb with bare fingers.
- If the newly installed bulb does not come on, contact an authorized electric drive smart center.
- Have the bulbs for the front fog lamps* and the LED daytime running lamps* replaced at an authorized electric drive smart center.

* optional

Overview bulbs

Front lamps

Headlamp	Type
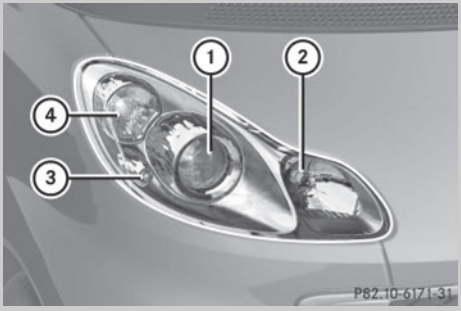	① Low-beam headlamp H7 (55 W) ② High-beam headlamp H7 (55 W) ③ Parking and side marker lamp WY 5 W ④ Turn signal lamp 2357 A
Front fog lamp*	Type
	① Front fog lamp H 11
Side turn signal lamp	Type
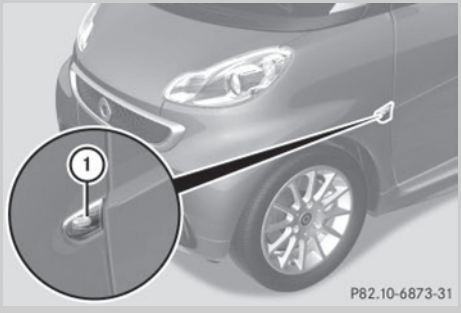	① Side turn signal lamp WY 5 W

* optional

Rear lamps	
Tail lamp unit	Type
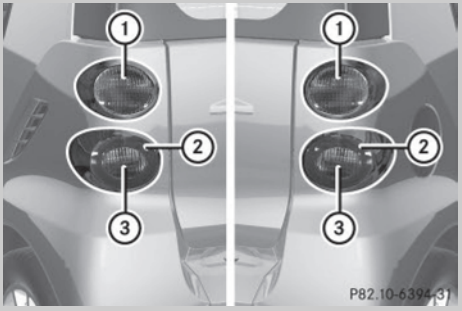	① Brake lamp/tail lamp/turn signal lamp/side marker lamp 12 V 21/5 W ② Reflector – ③ Backup lamp 12 V 21 W
License plate lamps	Type
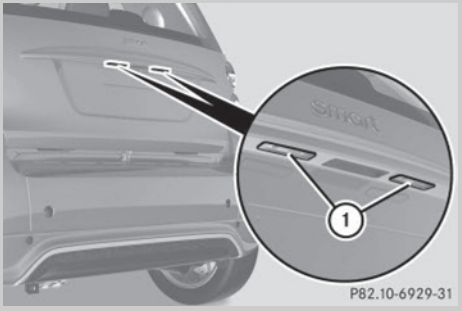	① License plate lamps C 5 W
High-mounted brake lamp	Type
	① High-mounted brake lamp W 16 W

Replacing bulbs for front lamps

Before you start to replace a bulb for a front lamp, do the following first:

- Turn the exterior lamp switch to position 0 (▷ page 64).
- Switch off the ignition.
- Open the service flap (▷ page 123).

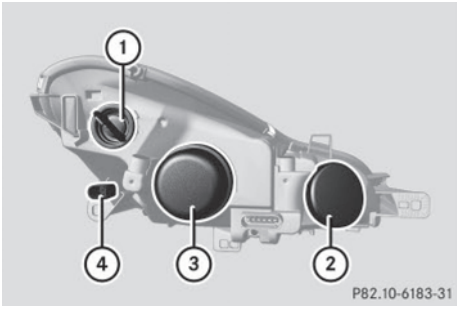

Left headlamp, (right headlamp in reverse)

Parking and side marker lamp bulb

- **Removing:**

  Driver's side: Turn bulb socket ④ toward the outside.

  Passenger side: Turn bulb socket ④ toward the outside.
- Pull bulb socket ④ out of the headlamp housing.
- Pull the bulb out of bulb socket ④.
- **Installing:** Insert the new bulb into bulb socket ④.
- Insert bulb socket ④ into the headlamp housing.
- Driver side: Turn bulb socket ④ toward the inside.

  Passenger side: Turn bulb socket ④ toward the inside.

Low-beam headlamp bulb

- **Removing:** Take off low-beam headlamp cover ③.
- Detach the electrical connector.
- Bend the retainer spring end down and forward until it unclips. Fold the retainer spring back.
- Pull the bulb out of the headlamp housing.
- **Installing:** Insert the new bulb into the headlamp housing.
- Fold the retainer spring forward.
- Bend the retainer spring end forward then up and back to clip in.
- Attach the electrical connector.
- Reinstall low-beam headlamp cover ③.

High-beam headlamp bulb

- **Removing:** Take off high-beam headlamp cover ②.
- Detach the electrical connector.
- Tilt the bulb socket down and pull it out.
- Pull the bulb out of the bulb socket.
- **Installing:** Insert the new bulb into the bulb socket.
- Fit the bulb so that the retaining lug of the base plate is pointing up.
- Press the bulb into the bulb socket until it is fully engaged.
- Attach the electrical connector.
- Reinstall high-beam headlamp cover ②.

Front turn signal lamp bulb

- **Removing:** Turn bulb socket ① counterclockwise by a quarter of turn and pull it out of the headlamp housing.
- Press gently onto the bulb and turn it counterclockwise.
- Pull the bulb out of bulb socket ①.
- **Installing:** Insert the new bulb into bulb socket ①.
- Press gently onto the bulb and turn it clockwise.
- Insert bulb socket ① into the headlamp housing.

The arrow on bulb socket ① must be in line with the line on the headlamp housing.

▶ Turn bulb socket ① clockwise by a quarter of turn.

Side turn signal lamp bulb

▶ **Removing:** Open the door on the corresponding side.

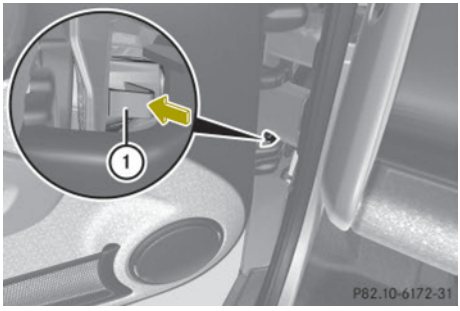

▶ Press on retaining lug ① in the direction of the arrow until the side turn signal lamp housing disengages.

▶ Close the door.

▶ Use a suitable tool to loosen the side turn signal lamp housing from the fender.

▶ Turn the bulb socket counterclockwise and pull it out of the side turn signal lamp housing.

▶ Pull the bulb out of the bulb socket.

▶ **Installing:** Insert the new bulb into the bulb socket.

▶ Insert the bulb socket into the side turn signal lamp housing and turn the bulb socket clockwise.

▶ Fit the side turn signal lamp housing onto the fender.

▶ Press gently onto the side turn signal lamp housing.

The side turn signal lamp housing must audibly engage.

Replacing bulbs for rear lamps

Before you start to replace a bulb for a rear lamp, do the following first:

▶ Turn exterior lamp switch to position 0 (▷ page 64).

▶ Switch off the ignition.

Tail lamp unit

▶ **Removing:**

Coupé: Open the upper tailgate.

▶ Open the lower tailgate.

▶ Cabriolet: Open the rear soft top (▷ page 72).

▶ Remove the side cover in the cargo compartment on the corresponding side.

▶ Fold the damping material forward, if necessary.

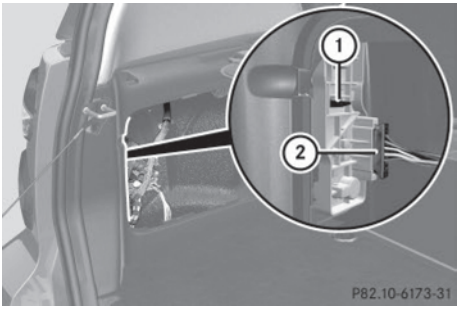

Left bulb carrier illustrated as example

① Retaining tab

② Electrical connector

▶ Press retaining tab ① in the center of the bulb carrier upwards.

▶ Pull the bulb carrier out of the tail lamp housing.

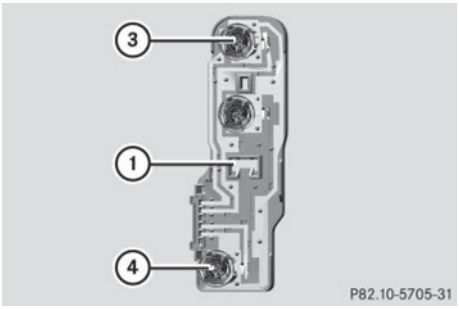

Left bulb carrier with bulb sockets (right bulb carrier in reverse)

① Retaining tab

③ Brake, tail, turn signal and side marker lamp bulb

④ Backup lamp bulb

- Depending on which bulb needs to be replaced, press gently onto bulb ③ or ④ and turn it counterclockwise.
- Pull the bulb out of the bulb socket.
- **Installing:** Insert the new bulb into the bulb socket.
- Press gently onto the bulb and turn it clockwise until it engages.
- Insert the bulb carrier into the tail lamp housing.
- Press gently onto the bulb carrier. Let retaining tab ① engage.
- Fold the damping material backward, if necessary.
- Reinstall the side cover in the cargo compartment.

High-mounted brake lamp

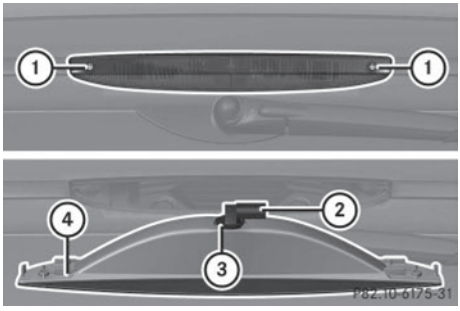

- **Removing:** Unscrew retaining screws ①.
- Remove high-mounted brake lamp ④.
- Detach electrical connector ② from bulb socket ③.
- Turn the bulb counterclockwise and pull it out of its socket.
- **Installing:** Install in the reverse order.

License plate lamps

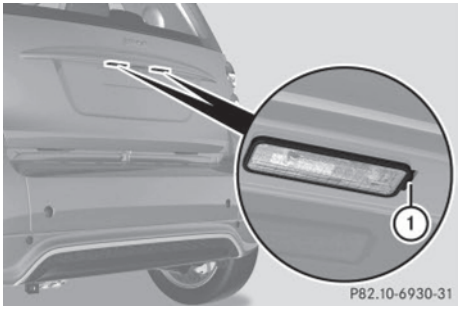

- Use a suitable tool to loosen the corresponding license plate lamp unit at jacking point ①.
- Carefully unclip the license plate lamp unit.

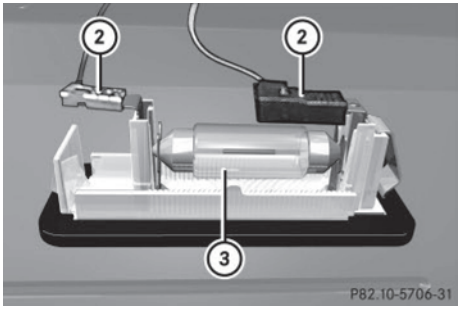

- Detach electrical connectors (2).
- Remove bulb (3).
- Insert the new bulb.
- Attach electrical connectors (2).
- Fit the license plate lamp unit on the right and press gently on the left.

  The license plate lamp unit must audibly engage.

Replacing interior lighting lamps

A 12 V/10 W bulb is required.

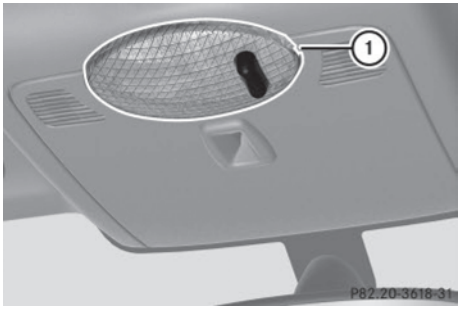

- **Removing:** Use a flat object to pry the lamp lens (1) off from the passenger side.

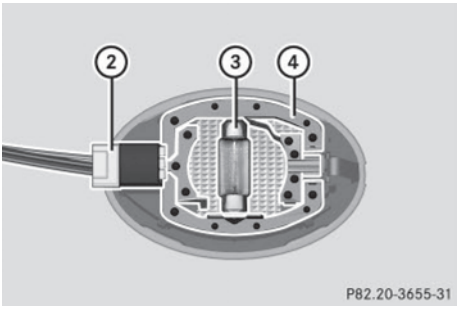

- Detach electrical connector (2) from the interior lamp.
- Remove bulb (3) from mount (4).
- **Installing:** Insert the new bulb.
- Attach electrical connector (2) to the interior lamp.
- Fit the lamp lens on the left in the opening and press gently on the right.

  The lamp lens must audibly engage.

Replacing wiper blades

About replacing wiper blades

WARNING

For safety reasons, switch off the wipers and remove the key from the starter switch before replacing a wiper blade. The windshield wipers could otherwise be set in motion and cause injury.

WARNING

Wiper blades are components that are subject to wear and tear. Replace the wiper blades at least twice a year, preferably in the spring and fall. Otherwise the windows will not be properly wiped. As a result, you may not be able to observe surrounding traffic conditions and could cause an accident.

! Hold on to the wiper when folding the wiper arm back. If released, the force of the impact from the windshield wiper

tensioning spring could crack the windshield.

Do not allow the wiper arms to contact the windshield glass without a wiper blade inserted.

We recommend that you have this work carried out at an authorized electric drive smart center.

To ensure proper visibility

- it is vital that you have wiper blades that are in perfect shape
- clean the wiper blades regularly with a cleaning agent
- remove any tough dirt stains with a sponge or brush

Windshield wiper blades

! Do not pull on the wiper blade inserts. They could tear.

Removing

▶ Remove the key from the starter switch.

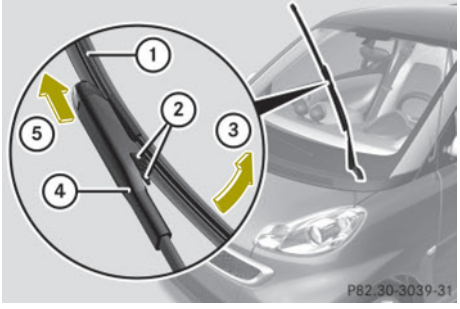

▶ Fold wiper arm ④ away from the windshield until it snaps into place.

▶ Press on retaining springs ② on both sides of wiper blade ①.

▶ Fold wiper blade ① away from wiper arm ④ in direction of arrow ③.

▶ Detach wiper blade ① in direction of arrow ⑤.

Installing

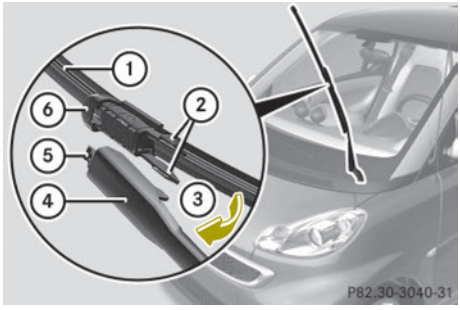

▶ With guide tab ⑤ sliding into opening ⑥, attach new wiper blade ① onto the wiper arm.

▶ Fold wiper blade ① towards the wiper arm in direction of arrow ③.
Retaining springs ② must audibly engage in attachment ④.

▶ Check whether wiper blade ① is securely fastened.

▶ Fold the wiper arm backward to rest on the windshield.
Make sure to hold on to the wiper when folding it back.

! Make sure the wiper blades are properly installed. Improperly installed wiper blades may cause windshield damage.

Rear window wiper blade

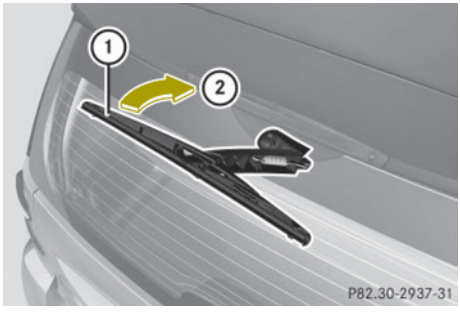

- **Removing:** Fold the wiper arm away from the rear window until you feel it engage.
- Fold wiper blade ① away from the wiper arm in direction of arrow ② until it disengages from its mounting.
- Detach wiper blade ①.
- **Installing:** Push the new wiper blade onto the wiper arm until you feel it engage.
- Fold the wiper blade into a position parallel to the wiper arm.
- Fold the wiper arm backward to rest on the rear window.

  Make sure to hold on to the wiper when folding the wiper arm back.

! Make sure the wiper blade is properly installed. An improperly installed wiper blade may cause rear window damage.

Adjusting the washer jet nozzles

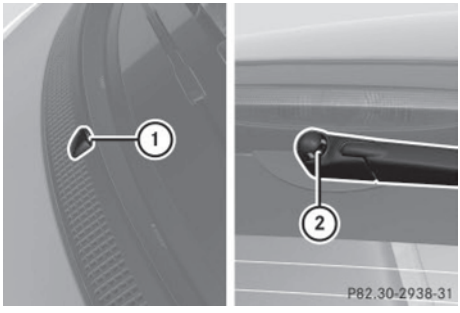

① Front washer jet nozzles

② Rear washer jet nozzles

- **Adjusting:** Use a needle to move washer jet nozzles ① or ② left, right, up, or down.

i Check the setting of the washer jet nozzles at regular intervals. The washer jet nozzles are correctly set when the water jet hits the windshield or the rear window approximately in the center.

Flat tire

Preparing the vehicle

Upon experiencing any type of problem with the vehicle's tires, switch on the hazard warning flasher, carefully slow down and exit the roadway in a cautious manner.

- Park the vehicle at a safe distance from moving traffic on a hard, flat surface when possible.
- Make sure the tire valve of the damaged tire is located below the horizontal axle of the wheel hub.
- Engage the parking brake.
- Turn the steering wheel so that the front wheels are in a straight ahead position.
- Move the gear selector lever to park position **P**.
- Switch off the drive system.
- Remove the key from the starter switch and take the key with you.

i Open door only when conditions are safe to do so.

- Have any passenger exit the vehicle at a safe distance from the roadway.

Using the tire repair kit

! Depending on the type of damage on the tire, the tire sealant could damage the sensor of the Tire Pressure Monitoring System (TPMS)*. Such damage is not covered by the smart Limited Warranty.

When having the damaged tire replaced, also have the TPMS sensors* checked for proper function. When the sensor is damaged, the TPMS* will not function properly. The sensor must then be replaced at an authorized electric drive smart center as soon as possible.

i Depending on production date of your vehicle, it will be equipped with version 1 or version 2 of the tire repair kit. Please make sure to refer to the descrip-

* optional

tion of the tire repair kit in your vehicle before sealing a tire.

The tire repair kit can be used to seal punctures of up to approximately 0.16 in (4 mm) on the tire tread.

The tire repair kit enables you to drive on the sealed tire to the nearest authorized electric drive smart center.

▶ You should have the sealed tire replaced at an authorized electric drive smart center.

⚠ WARNING

Take care not to allow the contents of the tire sealant to come in contact with hair, eyes or clothing. The tire sealant is harmful if inhaled, swallowed or absorbed through the skin - causes skin, eye and respiratory irritation. Wear gloves while using this product if they are available.

Any contact with eyes or skin should be flushed immediately with plenty of water.

If clothing comes in contact with the tire sealant, change clothing as soon as possible.

In case of allergic reaction or rash, consult a physician immediately.

Notes

- Small tire punctures, particularly those in the tread, can be sealed with the tire sealant.
- The tire sealant can be used in ambient temperatures from -4°F (-20°C) to 104°F (+40°C).
- Do not remove any foreign objects such as nails or screws that have penetrated the tire.
- Do not use the tire sealant if the tire has been damaged by being driven when insufficiently inflated (e.g. bumps, cuts, cracks etc. on the tire).
- Allow escaped tire sealant to dry, then peel it off.
- Immediately wash all painted surfaces that came into contact with the tire sealant using a damp cloth.
- Avoid skin and eye contact with the tire sealant.
- Do not swallow the tire sealant.
- Allow the tire sealant that is inside the damaged tire to dry and dispose of together with the tire.
- Do not use the tire sealant after the expiration date has elapsed (see top of container).

  Instead, have it replaced at an authorized electric drive smart center.

⚠ WARNING

The tire sealant is a limited repair device. The tire sealant cannot be used for cuts or punctures larger than approximately 0.16 in (4 mm) and tire damage caused by driving with extremely low tire inflation pressure, or on a flat tire, or a damaged wheel.

Do not drive the vehicle under such circumstances.

If you are unsure of the condition of the tire or have any question whatsoever about its suitability for driving contact the nearest authorized electric drive smart center for assistance or call Roadside Assistance.

⚠ WARNING

Please review the instructions below for using the tire repair kit. If you are not confident that you can competently follow the instructions for using this kit, do not use the kit, but instead call for Roadside Assistance.

⚠ WARNING

Keep the tire sealant out of reach of children. If swallowed, rinse mouth immediately with plenty of water and drink plenty of water.

Do not induce vomiting!

Consult a physician immediately.

Keep away from open flame, heat source or sparks. Do not smoke.

Sealing a tire (Version 1)

- ▶ Take the tire repair kit from the passenger footwell (▷ page 160).
- ▶ Open the tire repair kit lid.

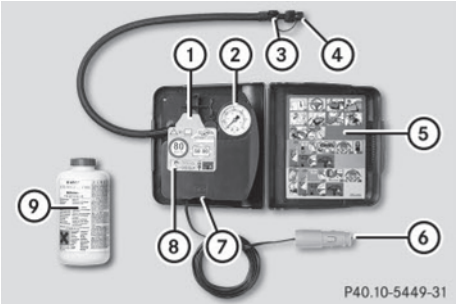

① Flange lid
② Pressure gauge
③ Vent screw
④ Filler hose with stopper
⑤ Operating instructions label
⑥ Electrical plug
⑦ Electric air pump switch
⑧ Sticker
⑨ Tire sealant container

- ▶ Remove sticker ⑧ from the tire repair kit.
- ▶ Attach sticker ⑧ where it will be easily seen by the driver on the instrument cluster.
- ▶ Unwind electrical plug ⑥ and filler hose ④.

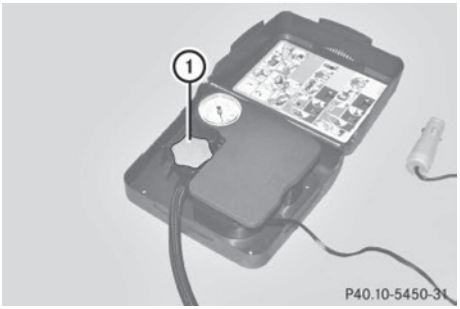

- ▶ Unscrew flange lid ①.
- ▶ Unscrew the lid of tire sealant container ⑨. Make sure not to damage the aluminum seal.

- ▶ Screw tire sealant container ⑨ onto flange ⑩.

  Make sure the container is threaded correctly onto the flange. This punctures the aluminum seal of the tire sealant container.
- ▶ Unscrew the valve cap from the tire valve of the damaged tire.
- ▶ Close vent screw ③.
- ▶ Pull off the stopper of filler hose ④.

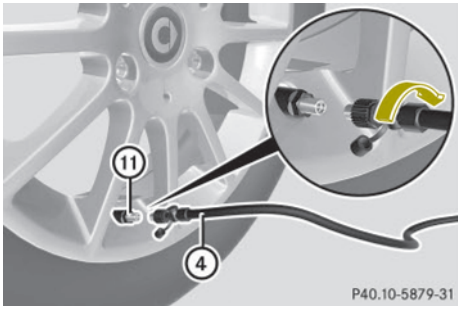

- ▶ Screw the end of filler hose ④ onto tire valve ⑪.
- ▶ Insert electrical plug ⑥ into the auxiliary power outlet (▷ page 110).
- ▶ Insert the key in the starter switch and turn it to position **1**.

ⓘ The vehicle's 12-volt battery is drained by use of the electric air pump. You should therefore keep the drive system running while inflating the tire.

- ▶ Press **I** on electric air pump switch ⑦. The electric air pump is switched on and inflates the tire.

ⓘ First, the sealant is pumped into the tire. The pressure may briefly increase to a high value. This is normal and not an indication of a malfunction. Do not switch off the electric air pump.

- ▶ Let the electric air pump inflate the tire for a maximum of ten minutes.

  Pressure gauge ② must display at least 180 kPa (1.8 bar, 26 psi).

❗ Do not operate the electric air pump longer than ten minutes without interruption. Otherwise it may overheat.

You may operate the electrical air pump again after it has cooled off.

- ▶ If a tire inflation pressure of at least 180 kPa (1.8 bar, 26 psi) is not attained, turn off the electric air pump by pressing **0** on electric air pump switch ⑦.
- ▶ Unscrew the end of filler hose ④ from tire valve ⑪.
- ▶ After clearing the area around the vehicle of people and obstacles, drive vehicle back or forth very slowly approximately 30 ft (10 m).

  This serves to better distribute the tire sealant material inside the tire.
- ▶ Screw the end of filler hose ④ onto tire valve ⑪.
- ▶ Inflate the tire again.

⚠ **WARNING**

If a tire inflation pressure of 180 kPa (1.8 bar, 26 psi) is not attained, the tire is too severely damaged for the tire sealant to provide a reliable tire repair.

In this case, the tire sealant cannot properly seal the tire.

Do not drive the vehicle.

Contact the nearest authorized electric drive smart center for assistance or call Roadside Assistance.

- ▶ After attaining a tire inflation pressure of at least 180 kPa (1.8 bar, 26 psi), press **0** on electric air pump switch ⑦. The electric air pump is switched off.
- ▶ Turn the key in the starter switch to position **0**.
- ▶ Unscrew the end of filler hose ④ from tire valve ⑪.
- ▶ Plug filler hose with the stopper.
- ▶ Tire sealant container ⑨ remains screwed onto flange ⑩.

▶ Place the tire repair kit securely in the vehicle.

▶ Drive off immediately.
The tire sealant will distribute itself evenly inside the tire.

⚠ WARNING

Do not exceed vehicle speed of 50 mph (80 km/h). A tire sealant repair is not designed to operate at higher speeds.

The sticker must be attached on the instrument cluster where it will be easily seen by the driver.

Vehicle handling characteristics of a tire sealant repaired tire may change. Adapt your driving accordingly.

▶ After driving for about 1.8 miles (3 km) or ten minutes, stop and exit the vehicle taking all of the appropriate safety precautions.

▶ Take the tire repair kit from the vehicle.

▶ Screw the end of filler hose ④ onto tire valve ⑪.

▶ Check the tire inflation pressure using pressure gauge ②.

⚠ WARNING

If tire inflation pressure has fallen below 130 kPa (1.3 bar, 19 psi) do not continue to drive the vehicle.

Park your vehicle safely away from the roadway and contact the nearest authorized electric drive smart center or call Roadside Assistance.

Have the damaged tire replaced.

▶ If the tire inflation pressure is at least 130 kPa (1.3 bar, 19 psi), inflate or deflate the tire to correct tire inflation pressure (see Tire and Loading Information placard located on the driver's door B-pillar).

- To increase the tire inflation pressure: Switch on the electric air pump.
- To decrease the tire inflation pressure: Open vent screw ③. Recheck the tire inflation pressure with the electric air pump's pressure gauge.

▶ After checking the tire inflation pressure, unscrew the end of filler hose ④ from tire valve ⑪.

▶ Screw the valve cap onto the tire valve.

▶ Plug filler hose with the stopper.

▶ Place the tire repair kit securely in the vehicle.

! The manufacturer is unable to guarantee that all tire punctures can be repaired with the tire repair kit, in particular cuts or perforations larger than approximately 0.16 in (4 mm) or away from the tire's tread. The manufacturer is not liable for damage sustained through improper use of the tire repair kit.

⚠ WARNING

Follow recommended tire inflation pressures.

Do not underinflate tires. Underinflated tires wear excessively and/or unevenly, adversely affect handling and energy consumption of the vehicle, and are more likely to fail from being overheated.

Do not overinflate tires. Overinflated tires can adversely affect handling and ride comfort, wear unevenly, increase stopping distance, and result in sudden deflation (blowout) because they are more likely to become punctured or damaged by road debris, potholes etc.

Do not overload the tires by exceeding the specified load limit as indicated on the Tire and Loading Information placard on the driver's door B-pillar. Overloading the tires can overheat them, possibly causing a blowout. Overloading the tires can also result in handling or steering problems, or brake failure.

- Drive to the nearest authorized electric drive smart center, to have the damaged tire replaced.
- Contact an authorized electric drive smart center as soon as possible to obtain a new filler hose and a new tire sealant container.
- Bring used tire sealant materials to an authorized electric drive smart center for proper disposal.
- Replace your tire sealant container every 4 years. Replacement containers are available at any authorized electric drive smart center.

⚠ WARNING

After changing a tire, contact an authorized electric drive smart center to make sure the bolts holding the wheel to the car are tight enough. Otherwise, the wheels could come off. Each bolt should be tightened to a torque of 81 lb-ft (110 Nm).

Sealing a tire (Version 2)

- Take the tire repair kit from the passenger footwell (▷ page 160).

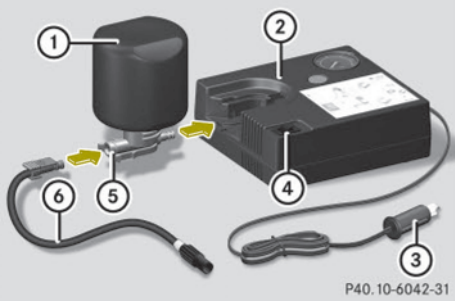

- Take electrical plug ③ and filler hose ⑥ from the bottom of the electric air pump housing.
- Engage the yellow plug of filler hose ⑥ in the opening in yellow closure cap ⑤.
- With the O-ring seals towards the electric air pump housing, insert yellow closure cap ⑤ into fixture ②.
- Push tire sealant container ① into fixture ② until both hooks of yellow closure cap ⑤ engage.

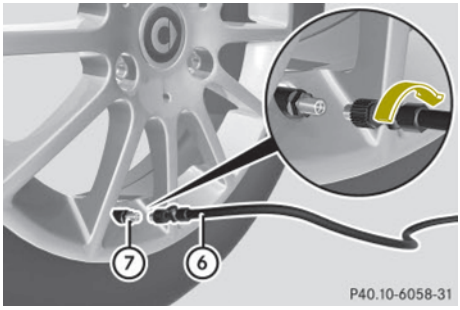

- Unscrew the valve cap from tire valve ⑦ of the damaged tire.
- Screw the end of filler hose ⑥ onto tire valve ⑦.
- Insert electrical plug ③ into the auxiliary power outlet (▷ page 110).
- Insert the key in the starter switch and turn it to position **1**.

ⓘ The vehicle's 12-volt battery is drained by use of the electric air pump. You should therefore keep the drive system running while inflating the tire.

- Press **ON** on electric air pump switch ④. The electric air pump is switched on and inflates the tire.

ⓘ First, the sealant is pumped into the tire. The pressure may briefly increase to a high value. This is normal and not an indication of a malfunction. Do not switch off the electric air pump.

- Let the electric air pump inflate the tire for a maximum of ten minutes.

  The pressure gauge must display at least 200 kpa (2.0 bar, 29 psi).

❗ Do not operate the electric air pump longer than ten minutes without interruption. Otherwise it may overheat.

You may operate the electrical air pump again after it has cooled off.

- If a tire inflation pressure of at least 200 kpa (2.0 bar, 29 psi) is not attained, turn off the electric air pump by pressing **OFF** on electric air pump switch ④.
- Unscrew the end of filler hose ④ from tire valve ⑦.
- After clearing the area around the vehicle of people and obstacles, drive vehicle back or forth very slowly approximately 30 ft (10 m).

  This serves to better distribute the tire sealant material inside the tire.
- Screw the end of filler hose ④ onto tire valve ⑦.
- Inflate the tire again.

⚠ WARNING

If a tire inflation pressure of 200 kPa (2.0 bar, 29 psi) is not attained, the tire is too severely damaged for the tire sealant to provide a reliable tire repair.

In this case, the tire sealant cannot properly seal the tire.

Do not drive the vehicle.

Contact the nearest authorized electric drive smart center for assistance or call Roadside Assistance.

- After attaining a tire inflation pressure of at least 200 kPa (2.0 bar, 29 psi), press **OFF** on electric air pump switch ④.
  The electric air pump is switched off.
- Turn the key in the starter switch to position **0**.
- Unscrew the end of filler hose ④ from tire valve ⑦.
- Place the tire repair kit securely in the vehicle.
- Drive off immediately.
  The tire sealant will distribute itself evenly inside the tire.

⚠ WARNING

Do not exceed vehicle speed of 50 mph (80 km/h). A tire sealant repair is not designed to operate at higher speeds.

The sticker must be attached on the instrument cluster where it will be easily seen by the driver.

Vehicle handling characteristics of a tire sealant repaired tire may change. Adapt your driving accordingly.

- After driving for about 1.8 miles (3 km) or ten minutes, stop and exit the vehicle taking all of the appropriate safety precautions.
- Take the tire repair kit from the vehicle.
- Screw the end of filler hose ④ onto tire valve ⑦.

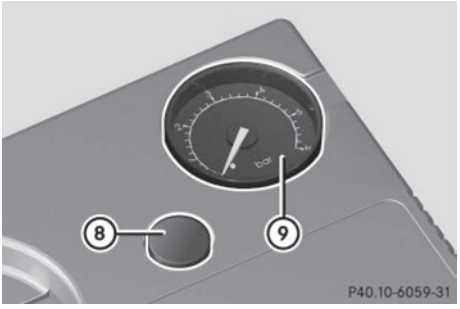

- Check the tire inflation pressure using pressure gauge ⑨.

⚠ WARNING

If tire inflation pressure has fallen below 130 kPa (1.3 bar, 19 psi) do not continue to drive the vehicle.

Park your vehicle safely away from the roadway and contact the nearest authorized electric drive smart center or call Roadside Assistance.

Have the damaged tire replaced.

- If the tire inflation pressure is at least 130 kPa (1.3 bar, 19 psi), inflate or deflate the tire to correct tire inflation pressure (see Tire and Loading Information

placard located on the driver's door B-pillar).

- To increase the tire inflation pressure: Switch on the electric air pump.
- To decrease the tire inflation pressure: Press deflate button ⑧. Recheck the tire inflation pressure with the electric air pump's pressure gauge ⑨.

▶ When the tire inflation pressure is correct, unscrew the end of filler hose ④ from tire valve ⑦.

▶ Screw the valve cap onto the tire valve.

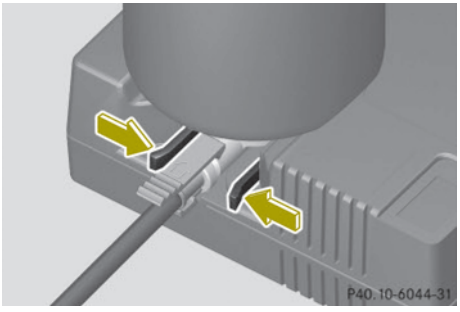

▶ To detach tire sealant container ① from the electric air pump, press both latches.

▶ Pull tire sealant container ① out of fixture ②.

Filler hose ④ remains on tire sealant container ①.

▶ Place the tire repair kit securely in the vehicle.

! The manufacturer is unable to guarantee that all tire punctures can be repaired with the tire repair kit, in particular cuts or perforations larger than approximately 0.16 in (4 mm) or away from the tire's tread. The manufacturer is not liable for damage sustained through improper use of the tire repair kit.

⚠ WARNING

Follow recommended tire inflation pressures.

Do not underinflate tires. Underinflated tires wear excessively and/or unevenly, adversely affect handling and energy consumption of the vehicle, and are more likely to fail from being overheated.

Do not overinflate tires. Overinflated tires can adversely affect handling and ride comfort, wear unevenly, increase stopping distance, and result in sudden deflation (blowout) because they are more likely to become punctured or damaged by road debris, potholes etc.

Do not overload the tires by exceeding the specified load limit as indicated on the Tire and Loading Information placard on the driver's door B-pillar. Overloading the tires can overheat them, possibly causing a blowout. Overloading the tires can also result in handling or steering problems, or brake failure.

▶ Drive to the nearest authorized electric drive smart center, to have the damaged tire replaced.

▶ Contact an authorized electric drive smart center as soon as possible to obtain a new filler hose and a new tire sealant container.

▶ Bring used tire sealant materials to an authorized electric drive smart center for proper disposal.

▶ Replace your tire sealant container every 4 years. Replacement containers are available at any authorized electric drive smart center.

⚠ WARNING

After changing a tire, contact an authorized electric drive smart center to make sure the bolts holding the wheel to the car are tight enough. Otherwise, the wheels could come off. Each bolt should be tightened to a torque of 81 lb-ft (110 Nm).

Wheel change

Preparing the vehicle

- Park the vehicle on a hard, flat surface when possible.
- Turn on the hazard warning flasher.
- Turn the steering wheel so that the front wheels are in a straight-ahead position.
- Engage the parking brake.
- Move the gear selector lever to park position **P**.
- Switch off the drive system.
- Have any passenger exit the vehicle at a safe distance from the roadway.

Removing the wheel

⚠ WARNING

When jacking up the vehicle, only use a suitable jack. Observe the manufacturer's safety instructions.

The jack must be designed for jacking up this vehicle at the jack take-up brackets built into both sides of the vehicle.

The jack is intended only for lifting the vehicle briefly for wheel changes. It is not suited for performing maintenance work under the vehicle. To help avoid personal injury, use the jack only to lift the vehicle during a wheel change.

Never get beneath the vehicle while it is supported by the jack. Keep hands and feet away from the area under the lifted vehicle. Always lower the vehicle onto sufficient capacity jackstands before working under the vehicle.

Always firmly engage the parking brake and block the wheels with wheel chocks or other sizeable objects before raising the vehicle with the jack. Do not release the parking brake while the vehicle is raised.

Make sure the ground on which the vehicle is standing and where you place the jack is solid, level and not slippery. If necessary, use a large underlay. On slippery surfaces, such as tiled floors, you should use a non-slip underlay, for example a rubber mat.

Do not use wooden blocks or similar objects to support the jack. Otherwise the jack may not be able to achieve its load-bearing capacity if it is not at its full height.

The jack must always be vertical when in use. Always try to use the jack on level surface. If you do not position the jack correctly, the vehicle can fall off the jack and seriously or fatally injure you or others.

Never switch on the drive system when the vehicle is raised.

Also observe the notes on the jack.

- Make sure to have a suitable jack[10], wheel wrench[10] and wheel chock[10].

  Contact an authorized electric drive smart center for information on which jack and wheel wrench are required.
- Prepare the vehicle as described (▷ page 195).
- Make sure the surface is level.

Prevent the vehicle from rolling away by blocking wheels with wheel chocks or other sizeable objects:

- Place one wheel chock or other sizeable object in front of and another wheel chock or other sizeable object behind the wheel that is diagonally opposite to the wheel being changed.
- On wheel to be changed, loosen but do not yet remove the wheel bolts (approximately one full turn with wheel wrench).

! Only position the jack on the designated take-up brackets.

You must not position the jack under the high-voltage battery. Otherwise, the high-voltage battery could be damaged.

[10] Not included and not available as factory equipment.

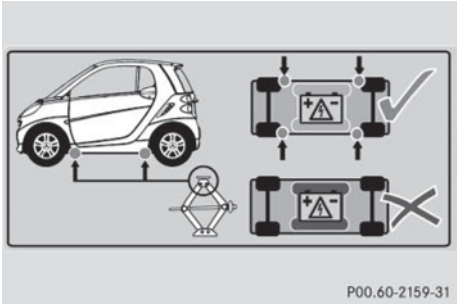

Warning label

The take-up brackets are identified by the embossed recesses in the area of the door sills.

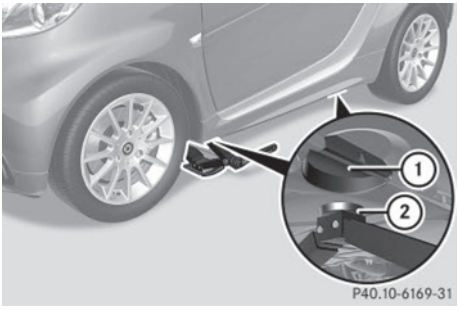

- ▶ Position jack ② under take-up bracket ① so that it is always vertical as seen from the side, even if the vehicle is parked on an incline.
- ▶ Jack up the vehicle until the wheel is a maximum of 1.2 in (3 cm) from the ground.
- ▶ Unscrew and remove the wheel bolts.

! Do not place wheel bolts in sand or dirt. This could result in damage to the wheel bolts and wheel hub threads.

- ▶ Remove the wheel.

Mounting the wheel

⚠ WARNING

Always replace wheel bolts that are damaged or rusted.

Never apply oil or grease to wheel bolts.

Damaged wheel hub threads should be repaired immediately. Do not continue to drive under these circumstances! Contact an authorized electric drive smart center or call Roadside Assistance.

Incorrect wheel bolts or improperly tightened wheel bolts can cause the wheel to come off. This could cause an accident. Be sure to use the correct wheel bolts.

⚠ WARNING

Only use genuine smart wheel bolts. Other wheel bolts may come loose.

Do not tighten the wheel bolts when the vehicle is raised. Otherwise the vehicle could fall off the jack.

- ▶ Clean contact surfaces of wheel and wheel hub.

! To avoid paint damage, place wheel flat against hub and hold it there while installing first wheel bolt.

- ▶ Guide the wheel onto the wheel hub and push it on.
- ▶ Insert two wheel bolts and tighten them slightly.
- ▶ Install last wheel bolt and tighten it slightly.
- ▶ Lower the vehicle until the vehicle is resting fully on its own weight.
- ▶ Remove the jack.
- ▶ Tighten the wheel bolts. Observe a tightening torque of 80 lb-ft (110 Nm).

⚠ WARNING

Have the tightening torque checked after changing a wheel. The wheels could come loose if they are not tightened to a torque of 80 lb-ft (110 Nm).

ⓘ The Tire Pressure Monitoring System (TPMS)* only functions on wheels that are equipped with the proper electronic sensors (▷ page 131).

Batteries

Notes on the vehicle's electrical system

The vehicle's electrical system provides power for the electric drive and all electrical consumers or components of the vehicle.

Power is supplied to the vehicle via two batteries:

- 12-volt battery
- High-voltage battery

Notes on the 12-volt battery

Your vehicle's 12-volt battery is located in the passenger footwell below the footrest (▷ page 199).

The 12 volt battery should always be sufficiently charged in order to achieve its rated service life. Refer to the Scheduled Maintenance Guide (USA only) or the Service booklet (Canada only) for battery maintenance intervals.

If you use your vehicle mostly for short-distance trips, you will need to have the 12 volt battery charge checked more frequently.

When replacing the battery, always use batteries approved by smart. For information, contact an authorized electric drive smart center.

If you do not intend to operate your vehicle for an extended period of time, consult an authorized electric drive smart center about steps you need to observe.

⚠ WARNING

Observe all safety instructions and precautions when handling automotive batteries.

Risk of explosion.

Fire, open flames and smoking are prohibited when handling batteries. Avoid creating sparks.

Battery acid is caustic. Do not allow it to come into contact with skin, eyes or clothing.

Wear suitable protective clothing, especially gloves, apron and face-guard.

Wear eye protection.

Rinse any acid spills immediately with clear water. Contact a physician if necessary.

Keep children away.

Follow the instructions in this Operator's Manual.

⚠ WARNING

Failure to follow these instructions can result in severe injury or death.

Observe all safety instructions and precautions when handling automotive batteries.

Never lean over batteries while connecting, you might get injured.

* optional

Battery fluid contains sulfuric acid. Do not allow this fluid to come in contact with eyes, skin or clothing. In case it does, immediately flush affected area with water and seek medical help if necessary.

A battery will also produce hydrogen gas, which is flammable and explosive. Keep flames or sparks away from battery, avoid improper connection of jumper cables, smoking, etc.

⚠ WARNING

Do not place any metal objects on a battery. You could otherwise cause a short circuit and the battery's highly flammable chemicals could ignite.

Never allow any metal object to contact both battery terminals or the positive terminal and the vehicle body at the same time. This might short circuit the battery and ignite the highly flammable and explosive hydrogen gas generated by the battery, causing serious personal injury.

⚠ WARNING

Keep flames or sparks away from battery, avoid improper connection of jumper cables, smoking, etc.

- When disconnecting the battery, always disconnect the negative terminal first, followed by positive terminal.
- When connecting the battery, always connect the positive terminal first, followed by the negative terminal.
- Do not loosen or disconnect the battery terminal clips while the drive system is running or the key is in the starter switch.

! Never loosen or detach battery terminal clamps while the drive system is running or the key is in the starter switch. Otherwise, electronic components could be severely damaged.

Have the battery checked regularly at an authorized electric drive smart center.

Refer to Maintenance Booklet for maintenance intervals or contact an authorized electric drive smart center for further information.

! Never invert the terminal connections!

Notes on the high-voltage battery

Have work on the high-voltage battery performed by an authorized electric drive smart center only. Observe the safety notes on (▷ page 16) as well as the notes on the 12-volt battery (▷ page 197).

⚠ WARNING

The electrolyte of the high-voltage battery, i.e. the battery fluid, is toxic and caustic. Do not allow this fluid to come in contact with eyes, skin or clothing, for example in case of an accident.

In case it does, immediately flush affected area with water and seek medical help immediately.

The high-voltage battery is located in the vehicle underbody. Keep this in mind when jacking up the vehicle. The vehicle has designated take-up brackets for the jack. For more information, see (▷ page 196).

! Only position the jack on the designated take-up brackets.

You must not position the jack under the high-voltage battery. Otherwise, the high-voltage battery could be damaged.

Disconnecting, removing, charging, reinstalling and reconnecting 12-volt battery

Disconnecting the 12-volt battery

If the 12-volt battery is disconnected or discharged

- turning the key in the starter switch will have no effect
- the transmission will remain in park position **P**

For more information see "Jump starting" (▷ page 200).

- ▶ Engage the parking brake.
- ▶ Move the gear selector lever to park position **P**.
- ▶ Turn off all electrical accessories.
- ▶ Switch off the drive system.
- ▶ Open the passenger door.
- ▶ Move the passenger seat to the rear as far as possible.
- ▶ Unscrew the carpet holder in the passenger footwell (▷ page 160).
- ▶ Lift the carpet.

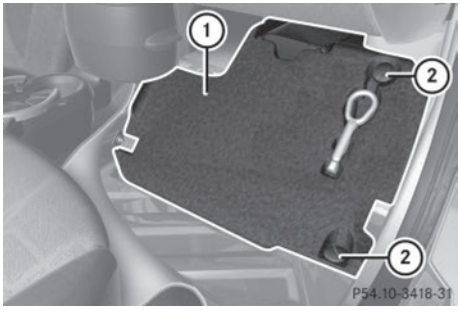

- ▶ Unscrew fastening screw ② counterclockwise.
- ▶ Pull footrest ① sideways out of the vehicle.
- ▶ Read and observe safety instructions and precautions (▷ page 197).

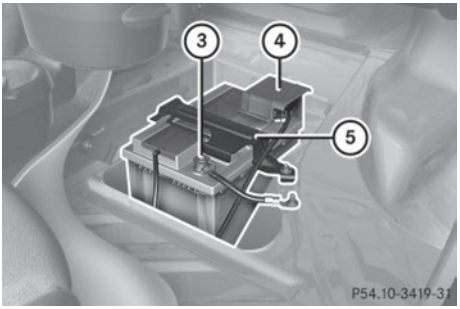

Always disconnect the battery in the order described below. Otherwise the vehicle's electronics can be damaged.

- ▶ Disconnect the battery negative lead from negative terminal ③.

  Make sure the negative lead does not come into contact with the positive lead.
- ▶ Remove cover ④ from the positive terminal.
- ▶ Disconnect the battery positive lead.

Removing the 12-volt battery

- ▶ Unscrew battery mount ⑤.
- ▶ Remove the battery support and bracket.
- ▶ Pull out the ventilation hose from the battery.

  Depending on battery arrangement in your vehicle model, the ventilation hose is located either on the left or right side of the battery.
- ▶ Remove the battery.

Charging the 12-volt battery

WARNING

Avoid creating sparks when charging the battery as escaping gases are flammable. Keep open flames away from the battery and do not smoke.

Do not touch the battery terminal with metal objects and do not remove the battery charger's terminal clamps until the battery charger has been switched off and no fur-

ther gas is being discharged by the batteries.

Only charge the battery in a well ventilated area.

There is a risk of acid burns during the charging procedure due to the gases which escape from the battery. Do not lean over the battery when it is being charged.

⚠ **WARNING**

Never charge a battery while still installed in the vehicle. Gases may escape during charging and cause explosions that may result in paint damage, corrosion or personal injury.

- ▶ Charge battery in accordance with the instructions of the battery charger manufacturer.

! Only use chargers of a correct and suitable voltage.

! Never attempt to recharge a frozen battery. Have the battery checked at a smart center. The battery housing could be damaged.

Reinstalling the 12-volt battery

- ▶ Reinstall the charged battery. Follow the previously described steps in reverse order.

! The battery, its filler caps and the ventilation hose must always be securely installed when the vehicle is in operation.

Reconnecting the 12-volt battery

! Always connect the battery in the order described below. Otherwise the vehicle's electronics can be damaged.

- ▶ Turn off all electrical accessories.
- ▶ Remove the key from the starter switch.

! Never invert the terminal connections!

- ▶ Connect the battery positive lead and fasten cover ④ (▷ page 199).
- ▶ Connect battery negative lead ③ (▷ page 199).

ⓘ After battery power (e.g. due to reconnection) was interrupted, you will have to set the clock (▷ page 94).

ⓘ Have the battery's charge status and acid level checked at the start of the cold season at a an authorized electric drive smart center.

Jump starting

Notes

⚠ **WARNING**

Failure to follow these directions will cause damage to the electronic components, and can lead to a battery explosion and severe injury or death.

Never lean over batteries while connecting or jump starting, you might get injured.

Battery fluid contains sulfuric acid. Do not allow this fluid to come in contact with eyes, skin or clothing. In case it does, immediately flush affected area with water, and seek medical help if necessary.

A battery will also produce hydrogen gas, which is flammable and very explosive. Keep flames or sparks away from battery, avoid improper connection of jumper cables, smoking, etc.

Attempting to jump start a frozen battery can result in it exploding, causing personal injury.

Read all instructions before proceeding.

! Do not tow-start vehicle. It is not possible to tow-start the vehicle. Attempting to do so may seriously damage the drivetrain which would not be covered by the smart Limited Warranty.

If the 12-volt battery is discharged, the drive system cannot be started, regardless

of whether the high-voltage battery is charged or not. Jump starting will not help to start the drive system if the high-voltage battery is drained. The high-voltage battery must then be charged.

The drive system can be started with jumper cables and the fully charged battery of another vehicle or an equivalent starter pack.

Observe the following:

- Do not start the drive system if the battery is frozen. Let the battery thaw out first.
- Only jump start from batteries with the same voltage rating (12 V). Jump starting with a more powerful battery could damage the vehicle's electrical system. Such damage will not be covered by the smart Limited Warranty.
- Only use jumper cables with sufficient cross-section and insulated terminal clamps.
- Should the battery be drained completely, let the donating power source charge the vehicle for several minutes before reattempting the starting process.

⚠ WARNING

Keep flames or sparks away from battery. Do not smoke.

Observe all safety instructions and precautions when handling automotive batteries.

Jump start assistance

Your vehicle's 12-volt battery is located in the passenger footwell below the footrest (▷ page 199).

For jump starting, use the terminals of the battery, keeping the leads connected.

- ▶ Make sure the two vehicles do not touch.
- ▶ Switch off all electrical consumers.
- ▶ Engage the parking brake.
- ▶ Move the gear selector lever to park position **P**.
- ▶ Switch off the drive system.
- ▶ Get access to the battery in the passenger footwell (▷ page 199).
- ▶ Remove the positive terminal cover.

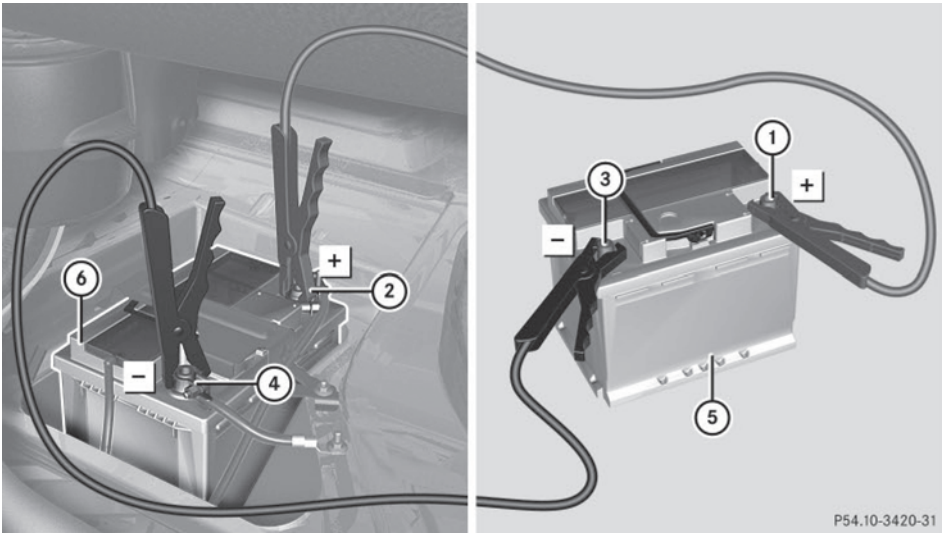

Position ⑤ represents the charged battery of another vehicle or an equivalent starter pack.

! Never invert the terminal connections!

- ▶ Connect positive terminal ① of charged battery ⑤ with positive terminal ② of your vehicle's battery ⑥ with a jumper cable. Clamp the jumper cable to positive terminal ① of charged battery ⑤ first.
- ▶ Start the engine of the vehicle with charged battery ⑤.
- ▶ Connect negative terminal ③ of charged battery ⑤ with negative terminal ④ of your vehicle's battery ⑥ with a jumper cable. Clamp the jumper cable to negative terminal ③ of charged battery ⑤ first.
- ▶ Start the drive system of your vehicle. You can now switch on minimal consumers. Do not switch on large consumers such as the rear window defroster or headlamps.

▶ Remove the jumper cables from negative terminals ③ and ④ first.

▶ Remove the jumper cables from positive terminals ① and ②.

You can now switch on the headlamps.

▶ Remount the positive terminal cover.

▶ Have the 12-volt battery checked at the nearest authorized electric drive smart center.

ⓘ Please keep in mind that it will take quite some time to charge the 12-volt battery. When you switch off the drive system after driving a short distance, you may not be able to start it again.

Charge the 12-volt battery completely as soon as possible.

Towing

About towing

This section offers information on towing methods for breakdown situations and emergency towing.

Recommended towing method - Breakdown situation

❗ To prevent damage during transport, do not tie down the vehicle by its chassis or suspension parts — use only wheel straps to position and hold down the vehicle.

Improper tie down on a flatbed carrier truck or trailer can damage suspension parts and body panels.

smart recommends that the vehicle be transported with all wheels off the ground using a flatbed carrier truck or appropriate wheel lift/dolly equipment.

Always have your vehicle transported:

- when the ⚠ warning lamp for the high-voltage system lights up in the instrument cluster
- when the Do not tow (away) message appears in the instrument cluster
- when the multifunction display is inoperative
- when one or several of the following warning lamps light up:
  - Drive diagnostics (red)
  - 12-Volt battery
  - Power steering
- if the brake pedal already starts to pulsate just after towing begins
- if you have to transport the vehicle over long distances

▶ Switch off the tow-away protection* and interior motion sensor* (▷ page 50).

Emergency towing

When circumstances do not permit the recommended towing method, the vehicle may be towed with all wheels on the ground using a strap or tow bar connected to another vehicle. Only tow the vehicle as far as necessary to have the vehicle moved to a safe location where the recommended towing method can be employed.

⚠ **WARNING**

If circumstances require towing the vehicle with all wheels on the ground, always tow with a tow bar if:

- the drive system will not run
- there is a malfunction in the brake system
- there is a malfunction in the power supply or in the vehicle's electrical system

* optional

A tow bar is necessary to adequately control the towed vehicle.

Prior to towing the vehicle with all wheels on the ground, make sure the gear selector lever is in neutral position **N** and the ignition is switched on.

⚠ **WARNING**

With the drive system inactive, there is no power assistance for the brake and steering systems. In this case, it is important to keep in mind that a considerably higher degree of effort is necessary to brake and steer the vehicle. Adapt your driving accordingly.

! The vehicle may be towed only for distances up to 30 miles (50 km) and at a speed not to exceed 30 mph (50 km/h).

Otherwise, the electric drive or the high-voltage system could be damaged.

! Do not tow other vehicles.

Otherwise, the drive system or components of the high-voltage system could be damaged.

! Do not tow the vehicle with the front axle raised. Doing so may cause serious damage to the brake system which is not covered by the smart Limited Warranty.

! Before towing the vehicle observe the following instructions:

- Do not tow with sling-type equipment attached to suspension parts. This may cause damage to the supports if towing on a bumpy road.
- Towing the vehicle should only be done using the properly installed towing eye bolt. Never attach a tow cable, tow rope, or tow rod to the vehicle chassis, frame, or suspension parts.

! Make sure the gear selector lever is in neutral position **N** while towing the vehicle. Doing otherwise may result in significant drive train damage.

! Towing the vehicle with a luggage rack* mounted is not permissible. The vehicle must not be towed by the luggage rack*.

ⓘ If the 12-volt battery is disconnected or discharged, the gear selector lever will remain locked in park position **P**. Contact an authorized electric drive smart center for assistance or call Roadside Assistance.

Towing eye bolt

The towing eye bolt is located in the passenger footwell under the carpet.

▶ Unscrew the carpet holder in the passenger footwell (▷ page 160).

▶ Lift the carpet.

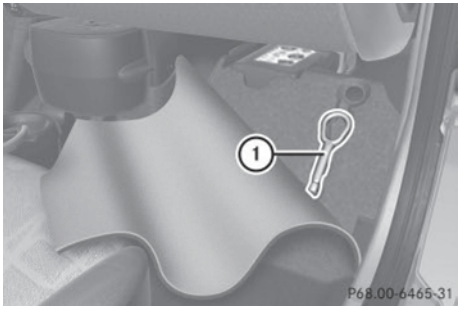

▶ Take out towing eye bolt ①.

Installing towing eye bolt

The towing eye bolt can be screwed into threaded holes which are located behind covers on the front and rear bumper.

Front cover

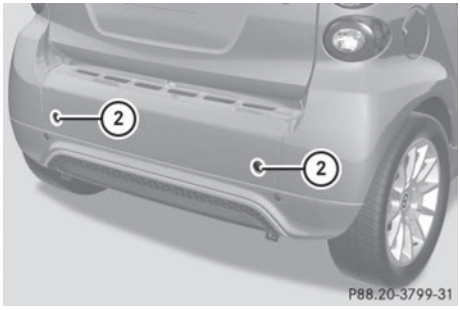

Rear covers

- ▶ Remove respective cover ① or ② using a suitable object to reveal the threaded hole for the towing eye bolt.
- ▶ Screw towing eye bolt in clockwise to its stop and tighten with a suitable object.

⚠ WARNING

For safety reasons, recovery or lashing down of the vehicle by means of the towing eye is not allowed. Failure to observe this could result in the towing eye being ripped out of its mounting and people being injured.

Towing the vehicle

- ▶ Engage the parking brake.
- ▶ Connect the strap or tow bar to the towing eye.
- ▶ Switch on the ignition.
- ▶ Depress the brake pedal and keep it pressed.
- ▶ Move the gear selector lever to neutral position **N**.
- ▶ Release the brake pedal.
- ▶ Switch on the hazard warning flasher.
- ▶ Release the parking brake.

Wait for at least 2 minutes after the vehicle has been towed until start working on the vehicle.

Fuses

The electrical fuses in your vehicle serve to switch off malfunctioning power circuits.

If a fuse is blown, the components and systems secured by that fuse will stop operating.

⚠ WARNING

Only use fuses approved by smart with the specified amperage for the system in question and do not attempt to repair or bridge a blown fuse this may cause an overload leading to a fire, and/or cause damage to electrical components and/or systems. Contact an authorized electric drive smart center if you encounter any electrical problems.

! A blown fuse must be replaced by an appropriate spare fuse (recognizable by its color or the fuse rating given on the fuse) of the amperage recommended in the fuse chart. Any smart center will be glad to advise you on this subject.

If a newly inserted fuse blows again, have the cause determined and rectified at an authorized electric drive smart center.

Before replacing fuses:

- Engage the parking brake.
- Make sure the gear selector lever is in park position **P**.
- Turn off all electrical accessories.

- Switch off the drive system.
- Remove the key from the starter switch.

Replacing a fuse

The fuse box is located on the driver's side below the dashboard.

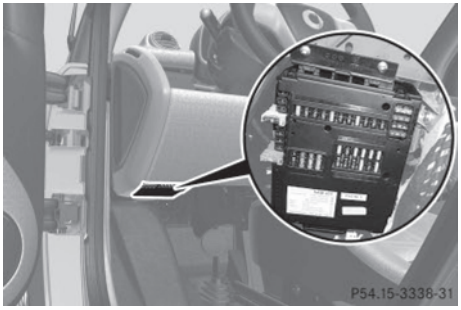

▶ From the fuse chart (▷ page 208), determine which fuse belongs to the malfunctioning accessory or component.

▶ Remove the respective fuse.

▶ Replace the defective fuse with a new one of the same amperage.

Fuse box

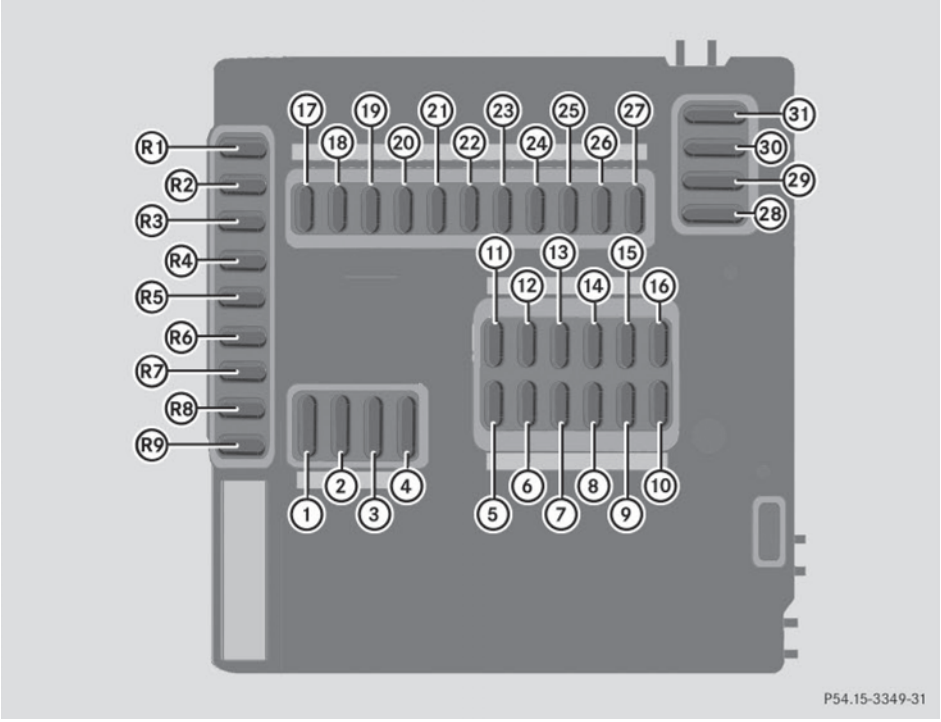

Front side

① - ㉛ Fuse

Ⓡ① - Ⓡ⑨ Backup fuse slots

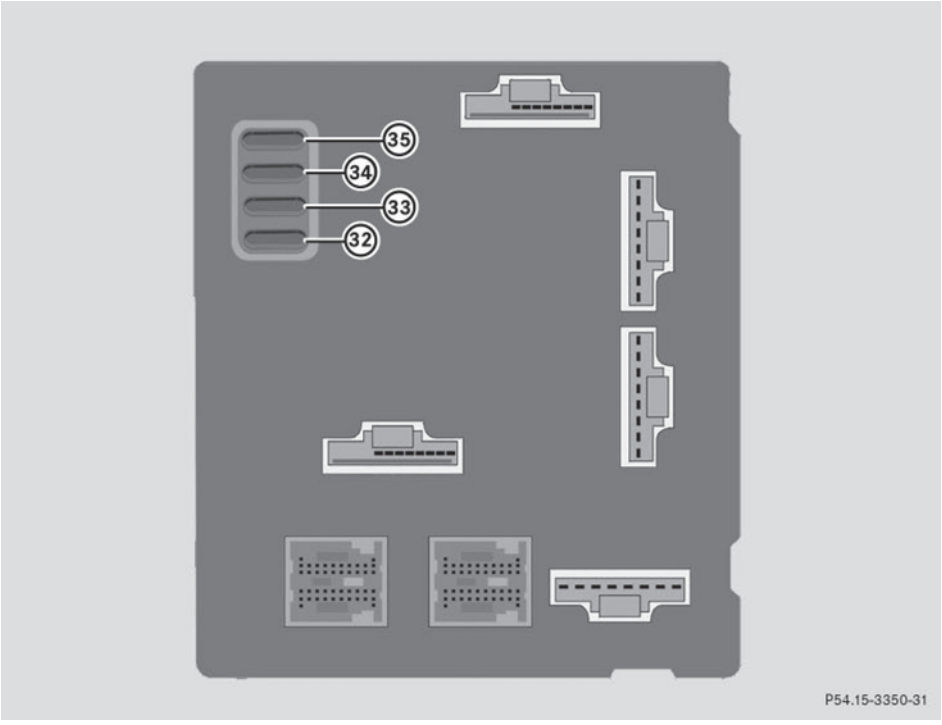

Rear side
(32) - (35) Fuse

Fuse chart

No.	Accessory/Component	Amperage	Color
(1)	–	–	–
(2)	Windshield wipers	25 A	Neutral
(3)	Power window (left and right)	20 A	Yellow
(4)	Passenger compartment blower	25 A	Neutral
(5)	Front fog lamps, LED daytime running lamps	10 A	Red
(6)	Right parking lamp, right tail lamp, license plate lamps	7.5 A	Brown
(7)	Left parking lamp, left tail lamp	7.5 A	Brown
(8)	Vehicle interior pre-heating and cooling	25 A	Neutral

No.	Accessory/Component	Amperage	Color
⑨	CPC, shifter, brake force booster vacuum pump	7.5 A	Brown
⑩	Coolant pumps 1 and 2, high-voltage battery	15 A	Blue
⑪	ESP® control unit	25 A	Neutral
⑫	Exterior lamp switch, turn signal lamp switch, cockpit switch module, on-board diagnostics socket, exterior rear view mirror heating, anti-theft warning system, rain-light sensor, charge level and power gauges, central locking system, instrument cluster, Tire Pressure Monitoring System (TPMS), brake and turn signal lamps (left and right)	10 A	Red
⑬	—	—	—
⑭	—	—	—
⑮	Safety circuit high-voltage battery	15 A	Blue
⑯	—	—	—
⑰	Rear window wiper (coupé only)	15 A	Blue
⑱	ESP® control unit, EPS control unit, restraint systems	10 A	Red
⑲	Electric drive components, engine control unit, transmission control unit, on-board diagnostics socket, sound generator	7.5 A	Brown
⑳	Air conditioning system, exterior rear view mirror adjustment, washer pump, audio, seat heating, wiper switch, cruise control, soft top switch (cabriolet only), backup lamp	10 A	Red
㉑	Auxiliary power outlet	15 A	Blue
㉒	Left low-beam headlamp	7.5 A	Brown
㉓	Right low-beam headlamp	7.5 A	Brown
㉔	—	—	—
㉕	Right high-beam headlamp	7.5 A	Brown
㉖	Left high-beam headlamp	7.5 A	Brown
㉗	Electric drive components	7.5 A	Brown

No.	Accessory/Component	Amperage	Color
㉘	Rear window defroster	40 A	Orange
㉙	Soft top (cabriolet only)	30 A	Green
㉚	Radiator cooling fan	40 A	Orange
㉛	Horn, central locking system	20 A	Yellow
㉜	—	—	—
㉝	Starter switch (ignition)	50 A	Red
㉞	ESP® control unit	40 A	Orange
㉟	EPS control unit	30 A	Green
㊀1	Exterior rear view mirror heating	7.5 A	Brown
㊀2	Brake lamps	7.5 A	Brown
㊀3	—	—	—
㊀4	Tire pressure monitor control unit	7.5 A	Brown
㊀5	Coolant pump, electric drive components, HV interior PTC heater passenger compartment, windshield unit car2go	10 A	Red
㊀6	Audio, subwoofer, sound system, soft top (cabriolet only)	15 A	Blue
㊀7	Interior lighting	5 A	Light brown
㊀8	Surround sound system	20 A	Yellow
㊀9	Seat heating control unit	25 A	Neutral

Parts service 212
Warranty coverage 212
Drive system and high-voltage system electronics 212
Identification labels 214
Vehicle specification 215
Rims and tires 216
Service fluids and capacities 217

Parts service

The "Technical data" section provides the necessary technical data for your vehicle.

Genuine smart Parts are subjected to stringent quality inspections. Each part has been specifically developed, manufactured or selected for and adapted to smart vehicles.

Therefore, Genuine smart Parts should be installed.

! The use of non-genuine smart parts and accessories not authorized by smart could damage the vehicle, which is not covered by the smart Limited Warranty, or could compromise the vehicle's durability or safety.

Warranty coverage

Your vehicle is covered under the terms of the warranties printed in the smart USA Warranty booklet (USA only) or the Warranty booklet (Canada only).

Your authorized electric drive smart center will exchange or repair any defective parts originally installed on the vehicle in accordance with the terms of the following warranties:

- smart USA Limited Warranty (USA only)
- New Vehicle Limited Warranty (Canada only)
- Emission System Warranty
- Emission Performance Warranty
- Corrosion Warranty
- California, Connecticut, Maine, Massachusetts, New York, Pennsylvania, Rhode Island, and Vermont Emission Control System Warranty
- smartmove Assistance (Canada only)
- State Warranty Enforcement Laws (Lemon Laws, USA only)

Replacement parts and accessories are covered by the smart Parts and Accessories warranties, copies of which are available at any authorized electric drive smart center.

Loss of Warranty booklet

Should you lose your smart USA Warranty booklet (USA only) or the Warranty booklet (Canada only), have an authorized electric drive smart center arrange for a replacement. It will be mailed to you.

Drive system and high-voltage system electronics

Work on drive system and high-voltage system electronics

⚠ WARNING

Always have maintenance work on drive system and high-voltage system electronics and components performed by a qualified specialist, e.g. at an authorized electric drive smart center. In particular, work relevant to safety or on safety related systems must be carried out at a qualified specialist workshop with expert knowledge of electric drive vehicles.

! Always have maintenance work on drive system and high-voltage system electronics and components, such as control modules, sensors and connecting cables, performed by a qualified specialist workshop with the necessary expert knowledge of electric drive vehicles and the tools to carry out the work required, e.g. at an authorized electric drive smart center. Otherwise there is a danger that vehicle components may wear more rapidly, which may void the vehicle's warranty.

Retrofitting electrical and electronic devices

Electrical and electronic devices can endanger vehicle operating safety.

! Damage or consequential damage due to retrofitting a device in the vehicle is not covered by smart's warranty.

If you install telephones or radio transmitters in the vehicle you must have such retrofits approved. smart approves the installation of telephones and radio devices if the work is done professionally and the device is connected to a low-reflection exterior antenna.

The transmitting power of the telephone or radio must not exceed the following maximum values.

Frequency range (band)	Maximum transmitting power (Watts)
Short wave (<50 MHz)	100
2 m wavelength	50
0.7 m wavelength	35
0.25 m wavelength	10

⚠ **WARNING**

Radio transmitters can interfere with the vehicle's electronic system, endanger the operating safety of the vehicle and thus your own safety, if

- there is no external antenna
- the external antenna is not low-reflection
- the external antenna is incorrectly installed

Excessive electromagnetic radiation can damage your health and that of others. Using an external antenna addresses and considers the concerns currently being discussed in scientific circles about the health hazards possibly posed by electromagnetic fields.

Because of this, have the external antenna installed exclusively at a qualified specialist workshop which has the necessary specialist knowledge and tools to carry out the work required, e.g. at a smart center. In particular, work relevant to safety or on safety-related systems must be carried out at a qualified specialist workshop.

On-board Diagnostics Socket (OBD)

The on-board diagnostics socket is located inside the vehicle on the right side of the left footwell.

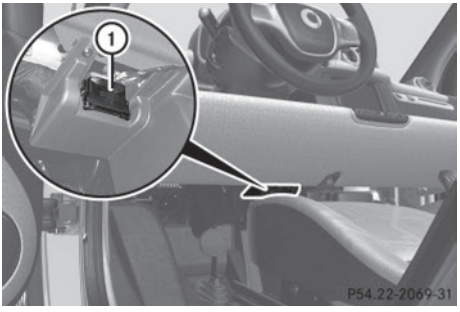

① On-board diagnostics socket

Identification labels

Signs and labels

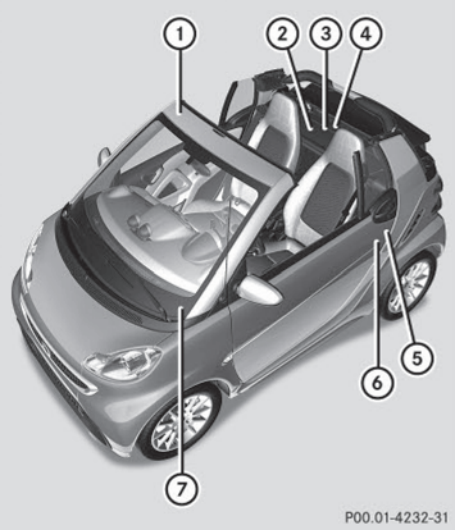

① Air bag information signs (sun visor)
② VIN (engine compartment)
③ Emission control information label, includes both federal and California certification exhaust emission standards (engine compartment)
④ Heat warning label (engine compartment)
⑤ Certification label (driver's door B-pillar)
⑥ Tire and loading information placard (driver's door B-pillar)
⑦ VIN (lower edge of windshield)

Certification label

▶ Open the driver's door.

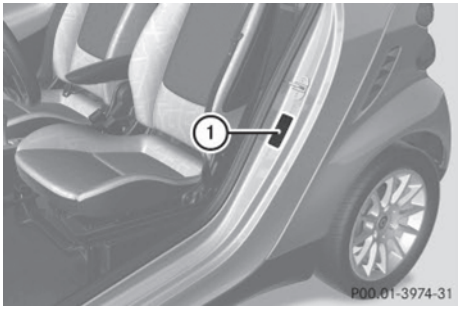

① Certification label (on driver's door B-pillar)

Data shown on the example certification label are for illustration purpose only. These data are specific to each vehicle and may vary from data shown in the illustration. Refer to certification label on vehicle for actual data specific to your vehicle.

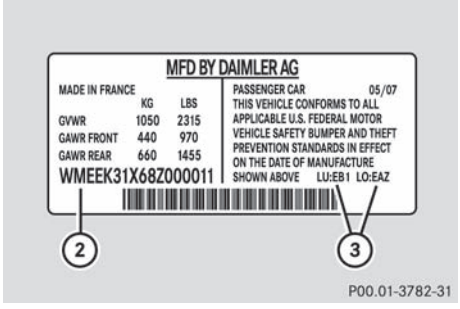

Example certification label (U.S. vehicles)
② Vehicle Identification Number (VIN)
③ Paintwork code

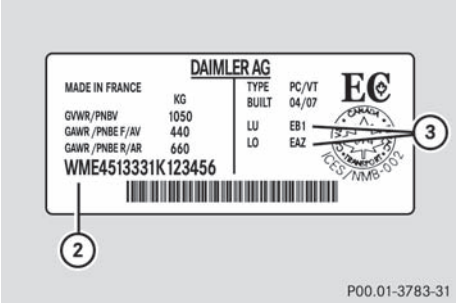

Example certification label (Canada vehicles)

② Vehicle Identification Number (VIN)

③ Paintwork code

Vehicle Identification Number (VIN)

The **V**ehicle **I**dentification **N**umber (VIN) can be found in the following locations:

- on the certification label on the driver's door B-pillar (▷ page 214)
- on the rear right on the cargo compartment floor (▷ page 215)
- in the lower edge of the windshield (▷ page 214)

▶ Open the cargo compartment.

▶ Fold back the carpet.

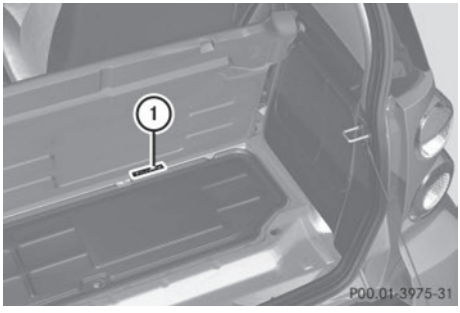

① VIN (on the cargo compartment floor)

Vehicle specification

The quoted data apply only to the standard vehicle. Contact an authorized electric drive smart center for the corresponding data of all special bodies and special equipment.

Main dimensions	
Overall vehicle length	107.4 in (2727 mm)
Overall vehicle width[11]	69.0 in (1752 mm)
Overall vehicle height	62.1 in (1555 mm)
Wheelbase	73.5 in (1867 mm)
Turning circle	28.7 ft (8.75 m)

Weights	
Cargo compartment load	max. 110 lb (50 kg)
Roof load	None

This vehicle is not intended to carry items on its roof. Thus roof rails and any roof-mounted devices must not be used.

⚠ WARNING

No racks or loads may be secured to the roof of the vehicle, as

- the panorama roof* may be damaged, thus injuring persons
- this can have a substantial adverse effect on the driving dynamics of the vehicle, thus causing accidents
- the rack and/or the load could detach and through this cause an accident or other people could be injured by the load and/or rack that has fallen off

[11] Exterior rear view mirrors folded out.

* optional

Rims and tires

Notes

! Only use tires which have been tested and approved by smart. Tires approved by smart are developed to provide best possible performance in conjunction with the driving safety systems on your vehicle such as the ABS or the ESP®.

Using tires other than those approved by smart may result in damage that is not covered by the smart Limited Warranty.

! Using tires other than those approved by smart can have detrimental effects, such as

- poor handling characteristics
- increased noise
- increased energy consumption

Moreover, tires and rims not approved by smart may, under load, exhibit dimensional variations and different tire deformation characteristics that could cause them to come into contact with the vehicle body or axle parts. Damage to the tires or the vehicle may be the result.

i Further information on tires and rims is available at any authorized electric drive smart center. A placard with the recommended tire inflation pressure is located on the driver's door B-pillar.

The tire inflation pressure should be checked regularly and should only be adjusted on cold tires. Follow tire manufacturer's maintenance recommendation included with vehicle.

Mobility

Your vehicle is equipped with a tire repair kit (▷ page 187). In case of a flat tire, it enables you to drive to the nearest authorized electric drive smart center on the sealed tire.

If the tire is damaged too severely for the tire sealant to provide a reliable tire repair:

▶ Contact the nearest authorized electric drive smart center.

or

▶ Call Roadside Assistance.

Mixed size tires

Abbreviations used in the following tables:

- FA: Front Axle
- RA: Rear Axle

	All-season tires	Light alloy rims
FA	155/60 R 15 74T M+S	4.5 J x 15 H2 Wheel offset: 0.93 in (23.5 mm)
RA	175/55 R 15 77T M+S	5.5 J x 15 H2 Wheel offset: 0.87 in (22 mm)

	Winter tires[12]	Light alloy rims
FA	155/60 R 15 74T M+S	4.5 J x 15 H2 Wheel offset: 0.93 in (23.5 mm)
RA	175/55 R 15 77T M+S	5.5 J x 15 H2 Wheel offset: 0.87 in (22 mm)

Service fluids and capacities

Notes

Vehicle components and their respective lubricants must match. Therefore only use products tested and approved by smart.

Please contact an authorized electric drive smart center for products tested and approved by smart.

WARNING

Comply with all valid regulations with respect to handling, storing and disposing of service fluids. Otherwise you could endanger persons or the environment.

Keep service fluids out of the reach of children.

For health reasons, you should prevent service fluids from coming into direct contact with your skin or clothing.

If a service fluid is swallowed, contact a physician immediately.

[12] Not available as factory equipment.

Capacities

Components	Capacity	Coolants, lubricants, etc.
Coolant system	approx. 6.9 US qt (6.5 l)	Anticorrosion/Antifreeze meeting specification MB 325.0
Air conditioning system	500 g (17.6 oz)	R134a refrigerant (never R 12)
	120 g (4.2 oz)	PAG lubricant oil Daphne 1234
Windshield washer system	4.0 US qt (3.8 l)	Windshield washer concentrate[13] (▷ page 218) Washer fluid mixing ratio (▷ page 218)

Brake fluid

⚠ WARNING

During vehicle operation, the boiling point of the brake fluid is continuously reduced through the absorption of moisture from the atmosphere. Under extremely strenuous operating conditions, this moisture content can lead to the formation of bubbles in the system, thus reducing the system's efficiency.

Therefore, the brake fluid must be replaced regularly. Refer to your vehicle's Maintenance Booklet for replacement interval.

Only brake fluid approved by smart is recommended. Any authorized electric drive smart center will provide you with additional information.

Windshield/rear window washer system

During all seasons:

- ▶ Use a windshield washer concentrate labeled for summer and water for temperatures above freezing point.
- ▶ Use a windshield washer concentrate labeled for winter and water for temperatures below freezing point.
- ▶ Premix the windshield washer fluid in a suitable container depending on the outside temperature and in accordance with the manufacturer's instructions[14].

Washer fluid mixing ratio

- Temperature above 32°F (0°C): 1 part windshield washer concentrate labeled for summer to 100 parts water
- Temperature of 14°F (-10°C): 1 part windshield washer concentrate labeled for winter to 2 parts water
- Temperature of -4°F (-20°C): 1 part windshield washer concentrate labeled for winter to 1 part water

[13] Use a windshield washer concentrate labeled for summer and water for temperatures above freezing point or a windshield washer concentrate labeled for winter and water for temperatures below freezing point.

[14] Refer to the notes for use on the container.

WARNING

Windshield washer concentrate is highly flammable. Fire, naked flames and smoking are prohibited when windshield washer concentrate is being handled.

Coolants

The battery and drive system coolant is a mixture of water and anticorrosion/antifreeze, which provides:

- Corrosion protection
- Freeze protection
- Boiling protection (by increasing the boiling point)

The cooling system was filled at the factory with a coolant providing freeze protection to approximately -35°F (-37°C) and corrosion protection.

! Add premixed coolant solution only. Adding water and MB 325.0 Anticorrosion/Antifreeze separately from each other, could cause drive system damage not covered by the smart Limited Warranty.

If the antifreeze mixture is effective to -35°F (-37°C), the boiling point of the coolant in the pressurized cooling system is reached at approximately 266°F (130°C).

The coolant solution must be used year round, even in countries which have high temperatures to provide the necessary corrosion protection and increase boil-over protection. Refer to Maintenance/ Service Booklet for replacement interval.

Coolant system design and coolant used determine the replacement interval. The replacement interval published in the Maintenance booklet is only applicable if MB 325.0 Anticorrosion/Antifreeze solution or other smart approved products of equal specification are used to renew the coolant concentration or bring it back up to the proper level.

For information on other smart approved products of equal specification, contact an authorized electric drive smart center.

To provide important corrosion protection, the solution must be at least 50% anticorrosion/antifreeze (equivalent to freeze protection to approximately -35°F [-37°C]).

If you use a solution that is more than 55% anticorrosion/antifreeze (freeze protection to approximately -49 °F [(-45°C]), the drive system and battery temperature will increase due to the lower heat transfer capability of the solution. Therefore, do not use more than this amount of anticorrosion/antifreeze.

If the coolant level is low, water and MB 325.0 Anticorrosion/Antifreeze should be used to bring it up to the proper level (have cooling system checked for signs of leakage). Please make sure the mixture is in accordance with label instructions.

Always use anticorrosion/antifreeze that has been approved by smart. For information contact an authorized electric drive smart center.

The water in the cooling system must meet minimum requirements, which are usually satisfied by normal drinking water.

If you are not sure about the water quality, consult an authorized electric drive smart center.

Capacities

	Cooling-system capacity
All models	approx. 6.9 US qt (6.5 l)

Anticorrosion/antifreeze

Your vehicle contains a number of aluminum parts. The use of aluminum components in motor vehicle drive systems necessitates that anticorrosion/antifreeze coolant used in such drive systems be specifically formulated to protect the aluminum parts.

Failure to use such anticorrosion/antifreeze coolant will result in a significantly shortened service life.

Therefore, the following product is strongly recommended for use in your vehicle: MB 325.0 Anticorrosion/Antifreeze agent.

Before the start of the winter season (or once a year in hot southern regions), you should have the anticorrosion/antifreeze concentration checked.

The coolant is also regularly checked each time you bring your vehicle to an authorized electric drive smart center for service.

Anticorrosion/antifreeze quantity:

	Approximate freeze protection	
	-35°F (-37°C)	-49°F (-45°C)
Cooling system	approx. 3.5 US qt (3.3 l)	approx. 3.8 US qt (3.6 l)